TRAFFIC & TRANSPORT DEVELOPMENT GROUP

Somerset Technical Advice Note 11/17

Specification & Guidelines for the Design, Installation and Maintenance of Traffic Signals in Somerset

SOMERSET County Council

WWW.SOMERSET.GOV.UK

Traffic & Transport Development Group
Somerset County Council
County Hall
TAUNTON
TA1 4DY

Tel: 0300 123 2224
Fax: 01823 358064

Document Control Sheet

This is a controlled document. Ensure that this document is current. Printed documents and locally copied files may become obsolete due to changes to the master document. The source of the document can be found on the file server at location: T:\TDG-DE\DE20 Business Projects\DE213 Service Improvement\DE10-11 New SCC Design Guidance\12 - Somerset Technical Advice Notes\STAN 11 17 Traffic Signals

Revision History

This document has the following history:

Version No.	Version Date	Summary of Changes	Changes marked
4.00	18/05/17	Document review	No
4.01	14/12/17	Minor amendments to standard details	No
4.02	31/05/18	Minor amendments to standard details	No
4.03	27/11/18	Minor amendments to standard details	No

Preparation

This document was prepared and authored by:

Name	Title
John Kitchen	Traffic Control Engineer

Approvals

This document requires the following approvals:

Name	Title
Andrew Boyle	Traffic Control Engineer
Lee Ford	Traffic Control Engineer
Ray Newman	Traffic Control Engineer

Distribution

This document has also been distributed to:

Name	Title & Organisation
Traffic and Transport Development Group	

Contents

1 GLOSSARY OF TERMS AND ABBREVIATIONS USED IN THIS SPECIFICATION 7

2 INTRODUCTION AND GENERAL REQUIREMENTS 11

2.1 GENERAL 11
2.2 EQUIPMENT SPECIFIED 13
2.3 PREAMBLE 13

3 GENERAL TRAFFIC CONTROL SYSTEM REQUIREMENTS & DESIGN IN SOMERSET 14

3.1 GENERAL 14
3.2 REMOTE MONITORING 15
3.3 URBAN TRAFFIC CONTROL (UTC) 15
3.4 MICROPROCESSOR OPTIMISED VEHICLE ACTUATION (MOVA) 15
3.5 CLOSED CIRCUIT TELEVISION (CCTV) 15
3.6 TRO'S AND THIRD PARTY APPROVALS 16

4 APPROVAL PROCESS 17

4.1 GENERAL 17
4.2 DESIGN STANDARDS REQUIRED IN SOMERSET 21
4.3 FEASIBILITY STUDY SUBMISSION REQUIREMENTS 22
4.4 DETAILED DESIGN SUBMISSION REQUIREMENTS 23
4.5 SCHEME DRAWINGS 26
4.6 MODELLING 28
4.7 FACTORY ACCEPTANCE TEST (FAT) 30
4.8 SUPERVISION DURING CONSTRUCTION 31
4.9 SITE ACCEPTANCE TEST (SAT) 34

5 APPROVED SUPPLIERS AND CONTRACTORS 37

5.1 SPECIALIST SUB-CONTRACTORS 37
5.2 DISCLAIMER 37

6 HEALTH AND SAFETY 38

6.1 GENERAL 38

7 ELECTRICAL INSTALLATION AND POWER SUPPLY 40

7.1 IEE REGULATIONS 40
7.2 ELECTRICITY SUPPLY 40
7.3 DISTRIBUTION NETWORK OPERATOR 41
7.4 WESTERN POWER DISTRIBUTION 41
7.5 SCOTTISH & SOUTHERN ELECTRIC (SOUTHERN ELECTRIC IN ENGLAND) 42

8 TRAFFIC SIGNAL EQUIPMENT REQUIREMENTS AND STANDARD PRACTICES 44

8.1 GENERAL 44
8.2 THE CONTROLLER 46
8.3 CONTROLLER AND MEC CABINETS 48
8.4 CONTROL OF DIMMING VOLTAGES 48
8.5 CABLING AND ELECTRICAL REQUIREMENTS 48
8.6 SIGNAL CABLE 49
8.7 CABLE FORMING 50
8.8 LOOP CABLE 51
8.9 FEEDER CABLE 51
8.10 CABLE IDENTIFICATION 52
8.11 REMOTE MONITORING EQUIPMENT 53
8.12 TRAFFIC SIGNAL POLES 54
8.13 SIGNAL HEADS 55
8.14 SIGNAL HEADS (VARIANTS) 56
8.15 PUSHBUTTON UNITS 56
8.16 USE OF AUDIBLE INDICATORS AT PEDESTRIAN CROSSINGS 57
8.17 POLE MOUNTED DETECTORS 57
8.18 DETECTION EQUIPMENT 58
8.19 LOOP CONFIGURATIONS 59
8.20 LOOP DETAILS 59
8.21 UTC CONTROL EQUIPMENT 62
8.22 SELECTIVE VEHICLE DETECTION (SVD) SYSTEMS RTEM 62
8.23 MOVA CONTROL EQUIPMENT 63
8.24 CCTV EQUIPMENT FOR TRAFFIC SIGNAL SITES 63
8.25 CCTV GENERAL REQUIREMENTS 63

8.26 CCTV Types 63
8.27 Camera Specification 64
8.28 Transmission 65

9 COMMUNICATION CONNECTIONS 66

9.1 General 66
9.2 BT Lines/Circuits at Existing Installations 66
9.3 Private Communication Circuits 66
9.4 Router Specification 67

10 CIVIL WORKS REQUIREMENTS 68

10.1 Poles and Pole Retention Sockets 68
10.2 Electric Supply Housing 70
10.3 Communication Circuit 70
10.4 Ducting System 70
10.5 Access Chambers 72
10.6 Carriageway Loop Box (CLB) 74
10.7 Medium Duct Box (MDB) 74
10.8 Large Duct Box (LDB) 75
10.9 Extra Large Duct Box (XLDB) 75
10.10 Controller Inspection Chamber (CIC) 75
10.11 Tactile Paving and Dropped kerbs 76
10.12 Loops and Slot Cutting 76
10.13 Road Markings 77
10.14 Road Studs 77

11 TRAFFIC SAFETY AND MANAGEMENT 78

APPENDIX A 79

APPENDIX B 81

APPENDIX C 83

1 GLOSSARY OF TERMS AND ABBREVIATIONS USED IN THIS SPECIFICATION

For the purposes of these guidelines the following meanings are intended

85%ile Speed Readings – the nationally accepted method of deriving the speed at which 85% of the vehicles are not exceeding.

CCTV – Closed Circuit Television – traffic surveillance cameras placed in strategic positions. Refer to section 8.24

CIC – Controller Inspection Chamber (CIC): - chamber positioned adjacent to the controller where all signal ducting for the site terminates. Refer to section 10.10 and standard drawing No's.SCC-TS-SD001, SD014 and SD016

CLB – Carriageway Loop Box (CLB) – carriageway box where loops are cut back to so they can be safely fed through the signal ducting system to the footway/verge area. Refer to section 10.6 and standard drawing No's. SCC-TS-SD001 and SD018

CLF – Cableless Linking Facility – a way of linking controllers to each other by time clock without the use of fixed cables

DB – Duct Box (DB) – for use with single or two way ducting runs, primarily used for the approach ducting for carrying feeder cables. Refer to section 10.7 and standard drawing No's.SCC-TS-SD001 and SD014

DfT: – Department for Transport

ELI test – the electrical resistance readings taken at the controller, at each pole and at each loop

ELV – Extra Low Voltage – Voltage at less than 50Volts and the Highway Authority's standard for all new sites in Somerset

EPROM – Erasable Programmable Read Only Memory – the chip where the controller configuration is burnt onto which when installed into the controller will operate the signals in the required way

ESH – Electric Supply Housing – where the electricity boards' power supply is terminated in the vicinity of the signal controller. Refer to section **Error! Reference source not found.** and standard drawing No's.SCC-TS-SD015 and SD016

XLDB – Extra Large Duct Box (XLDB) – used where more than three way ducting runs are required and primarily used on the main duct ring around the site linking all the signal poles together. Refer to section 10.9 and standard drawing No's. SCC-TS-SD001 and SD014

FAT – Factory Acceptance Test – the controller functionality and safety tests carried out by the Traffic Control Engineer, prior to the controller being despatched from the factory

FMS – Fault Management System – the control room computer and software that allows the management of fault reporting and repair between the control room and the Term Maintenance Contractor

Final Site Acceptance Test Certificate – the certificate that declares the installation complete in accordance with the specification and drawings. The issue of this certificate declares the commencement of the 12 month Maintenance Period for the Traffic Signal installation and associated civil works

Highway Authority: – Somerset County Council

HCD – Highway Construction Detail – the standard drawings contained in the Highways Agency's 'Design Manual for Roads and Bridges' (DMRB)

HDC – Highway Development Control Team – the team of Somerset County Council Development Control Engineers

Interim Site Acceptance Test Certificate – the temporary acceptance certificate issued to the Principal Contractor allowing them to switch the installation on. The Certificate identifies remedial works required to complete the installation, before the issue of the Final Site Acceptance Test Certificate will be considered

LAN – Local area network

LDB – Large Duct Box (LDB) – used where three way ducting runs are required and primarily used on the main duct ring main around the site linking all the signal poles together. Refer to section 10.8 and standard drawing No's. SCC-TS-SD001 and SD014

LED – Light Emitting Diode – the Highway Authority's standard specification for illumination of vehicle and pedestrian aspects

LV – Low Voltage – voltage between 50 and 1000Volts

MOVA – Microprocessor Optimised Vehicle Actuation – is traffic signal control hardware and software that provides safer and more flexible control of individual or linked installations, and used for 'high speed' road sites

Pelican Crossing – a pedestrian signal controlled crossing with far side pedestrian signal heads, a flashing amber/green man crossing period of a fixed duration which is activated solely by push button. Highway Authority policy is to replace these with **Puffin Crossings**
New Pelican crossings are no longer permitted to be installed (since April 2016).

Pegasus Crossing
A pedestrian signal controlled crossing with special consideration for horse riders. If the crossing is to be used by pedestrians and cyclists too, then a parallel separate toucan crossing may be placed next to the Pegasus crossing.

Pole Retention Socket (PRS) – modular system device used to secure poles in the ground and allow access to the pole from underneath for cabling. Refer to section 10.1 and standard drawing No SCC-TS-SD001 and SD017

Principal Contractor – the main contractor responsible for the whole of the site and works, employed by the Promoter of the scheme

Promoter – the person, company or other body that commissions the works and will have ownership of the installation until the Highway Authority formally adopts it

Puffin Crossing – a pedestrian signal controlled crossing with near side pedestrian signal heads, extendable all-red crossing period, instigated by a push button request, accompanied by pedestrian detectors

RMS - Remote Monitoring System – the control room computer and software that monitors faults and provides communication capability to all signal installations in Somerset

SAT – Site Acceptance Test – the inspection, functionality and safety tests carried out by the Traffic Control Engineer, prior to an installation being switched on

SCC – Somerset County Council

SCOOT – Split Cycle Offset Optimisation Technique – the control room strategy that provides real time dynamic control of installations linked by the UTC System

Specialist Traffic Control Systems Sub-Contractor – the contractor nominated by Highway Authority to carry out modifications to the UTC, Bus Priority and CCTV control systems situated in the Traffic Control Room in County Hall

Specialist Traffic Signal Installation Contractor or Sub-Contractor – the contractor/sub-contractor employed by the Promoter/Principal Contractor to supply the controller, configure and install it the electronic equipment and cabling for the installation. Some of these Contractors can supply all services that are required, and may therefore act in the role of Principal Contractor

Somerset County Council Term Maintenance Contract – the Term Maintenance Contract let by Somerset County Council to maintain all traffic signal installations and ancillary equipment in Somerset

Somerset County Council Term Maintenance Contractor – the specialist contractor employed by Somerset County Council to deliver the services required in the Somerset County Council Term Maintenance Contract

Specialist Traffic Signal Designer – the experienced individual or company that is designing, detailing, specifying and configuring the installation on behalf of the Promoter

Topas – Traffic Open Products and Specifications

Toucan Crossing – an advanced combined pedestrian and cyclist signal controlled crossing with nearside pedestrian and cyclist signal heads, extendable crossing period and pedestrian detectors

Traffic Control Engineer – Somerset County Council's Traffic Control Unit engineer or their nominated representative. This Engineer is authorised to accept the traffic signal installation on behalf of Somerset County Council

TCR – Traffic Control Room – the room where Somerset County Council's traffic control systems are situated in County Hall

TCU – Traffic Control Unit – the team of Somerset County Council Traffic Control Engineers headed by the Traffic manager

Traffic Signal Controller Manufacturer – the company that manufactured the installation controller

Traffic Signals – any junction or controlled crossing with signals present that control conflicting traffic and or pedestrian movements

Strategic Planning and Transport Policy Team – the team of Somerset County Council Transportation Planning Engineers

UTC – Urban Traffic Control system – the control room communications hardware, software and computers that provide the linking, control and monitoring of selected installations in urban areas

UTMC – Urban Traffic Management and Control – the strategy and protocol used in the control, coordination and linking of transport and users needs within the conurbation areas

2 Introduction and General Requirements

2.1 General

2.1.1 This Document describes and sets out the minimum requirements for all matters relating to the supply, installation and commissioning of traffic control and information systems. The Document will apply to all new installations and modifications to existing installations unless stated otherwise by the Traffic Control Unit (TCU).

2.1.2 All traffic control and information systems shall comply with the “Code of Practice for Traffic Control and Information Systems for All-Purpose Roads” – TA84/06 or the latest version.

2.1.3 The Highways Agency’s ‘Specification for Roads and Bridges’ would normally be used for the highway works specification. This Document will assist the Promoter with the preparation of the Appendices relating to traffic signals and associated civil works.

2.1.4 This document is not intended as a full specification and use of this document in no way relieves the Promoter of their responsibilities to provide a safe design compliant with the regulations, codes of practice and national recommendations in force at the time. However if any aspect of this document is not adhered to without the prior written permission of the Traffic Control Engineer then the Highway Authority has the right to refuse acceptance of all or any aspect of the installation.

2.1.5 Any anticipated departure from either nationally accepted or locally derived standards or recommendations stated in this document by the promoter or their contractor/s for equipment, standards, practices or procedures for the scheme/installation/s, shall only be investigated by the Highway Authority with a minimum of 28 days prior written notification before such departure approval is required. The reasons given for such a departure will then be duly considered and then if accepted or refused the promoter will be notified in writing within the 28 day period stated; with reasons or restrictions given in the approval/refusal. If during this 28 day period further information is required by the Highway Authority to come to a decision then this will be requested by electronic mail to the promoter, providing an email address is provided.

2.1.6 Each site will vary in its requirements and any proposals put forward will be subject to scrutiny in both engineering terms and also in the form of safety and technical audits carried out by the TCU, HDC and Road Safety staff.

2.1.7 Given the variable nature and requirements of individual installations, it is strongly recommended that any organisation(s) contemplating the design and installation of Traffic Signal installations in Somerset contact the TCU at the earliest opportunity. This will help to avoid any abortive work. The contact telephone number is 0300 123 2224. This number can also be used to contact the TCU on any other relevant matter. Subject to the nature of the enquiry and

team workload, a telephone response could normally be expected within 24 hours (except weekends and bank holidays).

2.1.8 It is strongly recommended that organisations wishing to design and install traffic signals within Somerset employ the services of a specialist consultant, competent in the design, specification and installation of traffic signal equipment and associated systems, and are fully conversant with this document.

2.1.9 The Highway Authority actively encourages the use of innovative and environmentally friendly, energy efficient equipment on its installations. If the promoter wishes to use such a product then they must notify the Highway Authority with a minimum of 28 days notification of the use of such a product in writing. The reasons given for the use of such a product will then be duly considered and then if accepted or refused the promoter will be notified in writing within the 28 day period stated; with reasons or restrictions given in the approval/refusal. If during this 28 day period further information is required by the Highway Authority to come to a decision then this will be requested by electronic mail to the promoter, providing an email address is provided.

2.1.10 The Highway Authority strongly endorses the use of TA 84/06 (DMRB Volume 8, Section 1, Part 2) which lays down minimum requirements with regards to the competency of personnel used in the design, configuration and installation of traffic control systems as well as those personnel used in the manufacture of the equipment.

2.1.11 Before any personnel are used on the design, configuration and installation of any such facility the promoter must ensure that they are satisfied that the minimum requirements expected for them to be totally competent in the tasks and duties they are to undertake are met.

2.1.12 During the feasibility stage of such a scheme it will be expected that the promoter will make available to the Highway Authority the C.V's including all training records of all personnel involved in the design and configuration of the installation/s. Without this information the Highway Authority cannot carry out a competency check and therefore has the right to refuse any detailed design submission that may follow on from the feasibility submission.

2.1.13 At the detailed design stage submission it will be expected by then that the Installation contractor should have been approached and as such the C.V's including all training records of the personnel to be utilised in these aspects of the works should be available for inspection by the Highway Authority for competency checking.

2.1.14 It is a requirement of the Highway Authority that all personnel working on any traffic control equipment within Somerset must be Sector 8 compliant to the level of work they are undertaking.

2.2 Equipment Specified

2.2.1 Where a particular type of equipment is specified in the Contract, the contractor shall only use that type of equipment, unless an alternative is approved in writing by the TCU.

2.2.2 The Engineer may free issue equipment. Free issue is defined as equipment purchased previously by the TCU for installation by the contractor.

2.2.3 The equipment shall comply with all relevant specifications in law or in common practice or covered in codes of practice. In all cases the current issue shall apply including any subsequent amendments.

2.2.4 The exclusion of a definitive list does not obviate the contractors' requirement to adhere to the relevant standards, specifications, laws, codes of practice and European directives relating to the work requirements of this document.

2.2.5 The equipment and works shall comply and be controlled by the relevant regulations. In all cases the current instrument or edition or issue will apply including any subsequent amendments.

2.2.6 The equipment and works shall comply and be manufactured, supplied, brought into use in accordance with the set procedures of the relevant technical directives and advice notes. In all cases the current edition or issue will apply including any subsequent amendments.

2.3 Preamble

2.3.1 Traffic signals include road junction signals, road shuttle signals, Puffin & Pelican pedestrian crossings Toucan cycle/pedestrian crossings, Pegasus equestrian/pedestrian crossings and wig-wag signals for emergency access.

2.3.2 Associated traffic control and monitoring equipment shall comprise such items that have a controlling effect on the highway. Such systems can include UTMC, UTC – SCOOT, MOVA (or similar), variable message signs, vehicle activated signs, bus lane enforcement & highway enforcement systems. Closed circuit television monitoring and detection equipment either included or displaced separately from any traffic signalling equipment or installation.

3 General Traffic Control System Requirements & Design in Somerset

3.1 General

3.1.1 The design, specification, installation and maintenance of a traffic signal installation is governed by numerous national regulations, codes of practice, advice notes and recommendations. The Promoter and the Specialist Traffic Signal Designer shall make themselves aware of the requirements of the following documents and the design and specification documents referred to within them and unless a Somerset standard applies then the most current version of these documents must be strictly adhered to at all stages of the project:

- Design Manual for Roads and Bridges, Volume 8, Section 1, TD 24/97
- Design Manual for Roads and Bridges, Volume 6, Section 2, TD 50/04
- Design Manual for Roads and Bridges, Volume 8, Section 1, TA 84/06
- Design Manual for Roads and Bridges, Volume 8, Section 1, TA 82/99

3.1.2 In addition to the above, the Highway Authority may, at its discretion, impose additional requirements on the Promoter, relevant to the installation under consideration.

3.1.3 Where there is doubt about the level of compliance with these documents, that is required in Somerset, the Promoter and the Specialist Traffic Signal Designer shall contact the TCU at an early stage in the design process.

3.1.4 Traffic Signal Equipment shall be supplied in new, unused condition, complete with all ancillary parts necessary to allow SAT of the equipment.

3.1.5 Traffic Signal Equipment shall be supplied with the most up to date versions of software and firmware.

3.1.6 If fewer than ten units of the type and make of any item of signal equipment proposed are already commissioned within Somerset County, then an additional unit of exactly the same specification shall be provided for spares (at no cost to the Authority) for the exclusive use of the Authority.

3.1.7 If fewer than ten of the type and make of controller proposed are already commissioned within Somerset, then an additional controller of exactly the same specification shall be provided for spares (at no cost to the Authority) for the exclusive use of the Authority. A list of types and makes of controller of which there currently are more than ten, is available from the TCU.

3.1.8 Where new traffic signals equipment is proposed not already in use within the authority then training will be required. This training will need to be provided for SCC TCU staff and the term maintenance contractor's staff. The training must be

certificated and to Lantra standards. This training will be required prior to any factory acceptance testing.

3.1.9 It is the policy of the Highway Authority to promote the use of environmentally friendly, electrically safe and energy efficient equipment at all new and existing sites that are altered. Therefore all new controllers shall be ELV type, signal heads shall be LED type and pedestrian aspects shall be LED type. ALL equipment installed at new sites will have to be ELV type.

3.2 Remote Monitoring

3.2.1 All traffic signal installations in Somerset shall be remotely monitored.

3.2.2 Further details regarding Remote Monitoring requirements are given in Section 8.11

3.3 Urban Traffic Control (UTC)

3.3.1 Where a new installation is located within an existing UTC/SCOOT region or in a location deemed to be suitable for UTC/SCOOT control the Highway Authority may require the installation to be fitted with the appropriate equipment. An early approach to the TCU is advisable to ensure that any integration of implementation of UTC is taken into account in the design of the installation.

3.3.2 Further details regarding these requirements are given in Section 8.21

3.4 Microprocessor Optimised Vehicle Actuation (MOVA)

3.4.1 At isolated junctions and as fallback mode in UTC regions, new or substantially modified traffic signal installations shall be equipped to operate under MOVA control, as advised by the TCU.

3.4.2 The Highway Authority has fully adopted TD 35/06 with regards to new and modified sites on high speed roads.

3.4.3 Further details regarding these requirements are given in section 8.23

3.5 Closed Circuit Television (CCTV)

3.5.1 New installations which are to be traffic signal controlled may need to be monitored by CCTV where existing CCTV coverage is inadequate and there is a strategic need. The Highway Authority may require the provision of a camera, support and telemetry system. The TCU will advise on these requirements. Further details of the CCTV systems requirements are shown in Section 8.24 .

3.6 TRO's and Third Party Approvals

3.6.1 Where an installation requires Traffic Regulation Orders or temporary traffic regulation orders to be made or amended, the Promoter will be required to fund the making of the Order, advertising, consultation legal expenses and highway works incurred by the Highway Authority.

3.6.2 Where an installation, or elements of an installation, require third party approval, the Promoter shall be responsible for obtaining such approvals as may be necessary, allowing plenty of time in obtaining the approval prior to requiring it, Evidence of this approval will be forwarded to the Highway Authority

4 Approval Process

4.1 General

4.1.1 To ensure that the requirements of the Highway Authority are fully met and that the Promoters proposals are both safe and appropriate for the location, a staged approval process shall be undertaken. This staged process also ensures that design flaws and/or installation errors are identified at an early stage and are not carried through to the finished scheme.

4.1.2 An outline of the Approval Process is given in Table 4.1.

4.1.3 The approval process applies to the design and installation of the traffic signal installation only and does not imply approval of any other aspects of the layout.

4.1.4 When a design and specification is given approval by the Highway Authority, that approval is valid for 12 months from the date the approval is given. This shall always apply unless extended in writing by the TCU.

TABLE 4.1 Responsibilities during the Approval Process

PROCESS STAGE	PROMOTER/PRINCIPAL CONTRACTOR INPUT	HIGHWAY AUTHORITY'S TRAFFIC CONTROL UNIT INPUT/OUTPUT
Feasibility Study	• Submit Transport Assessment Report • Submit C.V's and Training records of all personnel involved with the design and configuration of the proposed installations • Submit general signal layout drawing. • Submit signal phasing/staging diagram. • Submit full Linsig/Transyt/Micro-Simulation Analysis input & output (modelling AM & PM peaks for existing situation, year of opening, each development stage, and normally 10 years from opening) with appropriate growth and migration of traffic factored in. • PV^2 (crossing facilities) • Accident data • 85%ile speed data (24 hours 7 days)	• Check Feasibility information submitted. • Prepare Stage 1 Safety/Technical Audit report. • Send Report to Highway Development Control for onward transmission to the Promoter.

PROCESS STAGE	PROMOTER/PRINCIPAL CONTRACTOR INPUT	HIGHWAY AUTHORITY'S TRAFFIC CONTROL UNIT INPUT/OUTPUT
Revised Feasibility Study (Where stage 1 Safety/Technical Audit Report identifies potential problems)	• Submit Exception Response to the Stage 1 Safety/Technical Audit. • Revise Feasibility Study as necessary	• Check Feasibility information submitted. • Prepare revised Stage 1 Safety/Technical Audit report. • Send Revised Report to Highway Development Control for onward transmission to the Promoter.
It Is Recommended That Detail Design Should Only Commence When The Feasibility Stage Is Approved In Principle.		
Detailed Design	• A complete package of information as set out in Section **4.4** - 'Detailed Design Submission Requirements'. • Submit C.V's and Training records of all personnel involved with `the installation of the proposed installations.	• Check All Detailed Design Information. • Prepare Stage 2 Safety/Technical Audit report. • Send Report to Highway Development Control for onward transmission to the Promoter.
Revised Detailed Design (Where stage 2 Safety/Technical Audit Report identifies anomalies or potential problems)	• Submit Exception Report to the Stage 2 Safety/Technical Audit • Revise Detailed Design package as necessary to comply with the Stage 2 Audit and exception response.	• Check All Detailed Design Information. • Prepare revised Stage 2 Safety/Technical Audit report. • Send Revised Report to Highway Development Control for onward transmission to the Developer.
It Is a Requirement That Construction Does Not Commence Until The Detailed Design Package Is Fully Compliant With The Stage 2 Audit And Exception Response		
Factory Acceptance Test (FAT)	• Arrange and conduct FAT. Minimum of 4 weeks' notice required. A Traffic Control Engineer & design/configuration engineer must be in attendance for this test. See also Section **4.7**	• Observe/assist with FAT and countersign FAT Certificate certifying that the Configuration and Controller are fit to use on the highway.
Construction/Signal Equipment Installation	• All Traffic Control Equipment shall be installed and tested by a Specialist Traffic Signal Installation Sub-Contractor. A list of approved contractors is available from the Traffic control unit.	• Site Supervision/Inspections as detailed in Section **4.8** Any construction/ installation issues found will be reported to the supervision team or to the Promoter/ Principal Contractor for rectification, as required.

PROCESS STAGE	PROMOTER/PRINCIPAL CONTRACTOR INPUT	HIGHWAY AUTHORITY'S TRAFFIC CONTROL UNIT INPUT/OUTPUT
Power Supply Installation	• It is the responsibility of the Promoter/Principal Contractor to order, programme and pay for installation of the power supply to the Traffic Control Equipment. Further details are contained in Section 7 - 'Electrical Installation and Power Supply'.	• The installed signal equipment is added to SCC's inventory database for regular reporting to the electricity supply company.
Telecommunications Installation	• The responsibilities for provision of communication circuits/lines are complex and are described in Section 9 - 'Communication Connections'	• As described in Section 9 and supplying the Promoter with advice and knowledge of communications as required.
Pre-Site Acceptance Test (SAT) Testing (Otherwise known as Pre-Commissioning)	• Ensure that all certificates and documents asterisked in Appendix 3 are provided to the Traffic Control Engineer before the SAT commences. Some certificates/documents are to be supplied one week prior to the SAT, see Section 4.6 • Ensure the following information ACAD drawing, Linsig files, MOVA dataset, MOVA licence number, all configuration files are provided at least 2 working day prior to the SAT. • Ensure that their Specialist Traffic Signal Installation Sub-Contractor fully tests the installation at least 24 hours prior to the Traffic Control Engineer to attending the SAT. • Ensure that all civil works relevant to the installations functionality are completed to the required standards prior to the SAT.	• The Traffic Control Engineer will not commence the SAT process without the required certificates and documents. • The Traffic Control Engineer will cancel the SAT after 1 hour if it is found that all the works are not satisfactorily completed.
The Site Acceptance Test May Only Take Place When The Construction/Pre-Commissioning Testing Is Fully Completed.		
Installation, Configuration and Commissioning of Instation Equipment (Normally carried out by the Traffic control unit and the Term Maintenance Contractor)	• * Install and commission Instation monitoring and control equipment, where required. (see note at the end of this table)	• Carry out, supervise, configure and assist the Term Maintenance Contractor with installation and commissioning of Instation monitoring and control equipment.

PROCESS STAGE	PROMOTER/PRINCIPAL CONTRACTOR INPUT	HIGHWAY AUTHORITY'S TRAFFIC CONTROL UNIT INPUT/OUTPUT
Site Acceptance Test (SAT) (Otherwise known as Commissioning)	• Arrange and co-ordinate SAT. Traffic Control Engineer to be given a minimum of 4 weeks' notice. • If the installation is carried out by a contractor that is not the Highway Authorities current term maintenance contractor then the promoter needs to arrange that they attend any commissioning to ensure the site satisfactory for maintenance take over. • Arrange for all snags spotted during the SAT to be corrected. • Arrange and co-ordinate another SAT if required by mutual agreement.	• The Traffic Control Engineer will cancel the SAT after 1 hour if it is found that all the works are not satisfactorily completed. • Conduct SAT and sign Final Site Acceptance Test Certificate if the installation passes the detailed functionality, operational and civil checks. • Prepare a list of snags found during the SAT and ensure that the Promoter/Principal Contractor addresses snags during SAT where practicable or within an approved timeframe. • If necessary conduct SAT appropriate to the snags found. • Sign Final SAT certificate if no snags are outstanding or further snags have occurred.
IMPORTANT NOTE **If during the SAT Somerset County Council's Term Maintenance Contractor is not satisfied with any aspect of the installation then they will not take on the maintenance and the SAT will be terminated and the site left off until such time as Somerset County Council's Term Maintenance Contractor is satisfied the site is completed to their satisfaction. During this time The Promoter or Principal Contractor will ensure that the site is bagged over.**		
Work on In-station equipment may only be carried out by the Term Maintenance Contractor. All costs associated with In-station work will be borne by the Promoter		
Stage 3 Post Opening Safety Audit	• Respond to Stage III Audit Report	• Attend Stage 3 (post opening) Safety Audit and contribute to the preparation of the Audit Report

4.2 Design Standards Required in Somerset

4.2.1 If there is no specific Somerset standard set out in this document then National standards shall always apply.

4.2.2 Due to the complexity of signal installations it is important to submit the proposed controller specification with the first detailed design submission. This will give the Traffic Control Engineer the opportunity to check the proposal and assist the Specialist Traffic Signal Designer with the submission of an acceptable standard of controller configuration.

4.2.3 Somerset has some unique modes of transport that need to be taken into account when building a Linsig model. In many of the key towns during September/October/November Carnival season takes place which involves a number of very large vehicles travelling in procession through the streets. These vehicles need to be taken into account when designing islands and radii on any proposed schemes adjoining or on a procession route. Obviously when carrying out the modelling the design should be reflected in the model and therefore the larger radii that maybe required also needs to be reflected. It is therefore imperative that the designer contacts the authority at an early stage to find out if their proposal may be affected by a procession route and therefore the design and model may need to be amended.

4.2.4 There are a number of Abnormal load routes agreed with Avon & Somerset Police located in Somerset on which there are minimum requirements laid down for available road widths. This has an effect on whether central traffic or pedestrian refuge islands can be installed and what size they can be. An early approach to the Highway Authority is recommended in order to obtain details of the location of these routes as we have details of the restrictions imposed.

4.2.5 The designer should make contact with the Highway Authority to obtain the list and restriction on the Traffic Sensitive Routes that exist in the county that may impact on works on the proposed scheme.

4.2.6 In order to progress an audit as a minimum we require the below as part of any submission:

4.2.7 The scheme should be drawn up on a detailed up to date topographical survey of the area at a scale of no smaller than 1/200. This should include as a minimum but not be limited to proposed pole locations (correctly annotated), traffic signal heads, pedestrian heads, push buttons, detectors, loops, traffic and pedestrian phases, controller position, maintenance bay location, tactile paving, any pedestrian guardrail, associated white lining and proposed staging of the installation. *(+HFS, roadstuds, cctv, mini-pillars, JIZ/SSD & proposed highway limits)*

4.2.8 If the proposal is for a pedestrian facility, we do require evidence of the PV^2 to show justification of the proposed type of facility. If the required PV^2 figure has not been obtained then alternative facilities are still available such as refuge or

zebra crossings. The designer should be aware that Pelican type crossings are no longer authorised and therefore any proposals for a new electrically controlled pedestrian crossing should be either a Puffin or Toucan type. Also any modifications taking place at an existing Pelican site will require the facility to be amended to a Puffin (or Toucan) with the necessary equipment changes to be carried out at the Promoters expense.

4.2.9 We have alternative designs for islands some of which incorporate pedestrian guardrail and others safety kerbing as a way of both protecting vulnerable users and a way of guiding them. If pedestrian islands are to be incorporated into the design, then they must be of sufficient width and length to incorporate any proposed guardrail without impeding the pedestrian waiting or walking area. The guardrail must not extend beyond the location of the pedestrian push button poles, nor must it be left so short that a user could get between the railing and the pole.

4.2.10 Speed data readings should be provided and it is suggested that 85%ile speed readings should be obtained, by use of an automatic data logger for a minimum of 7 days (24 hours per day), both speeds and volumes of traffic should be measured. This would assist in determining forward visibility requirements and help establish the extent of vehicular detection required at any proposed installation.

4.2.11 The feasibility drawing should show on it the Junction Intervisibility Zone as detailed in TD 50/04.

4.2.12 When a scheme is commissioned we always require temporary signs to Dia.No.7014 (with appropriate variant) of the TSRGD to be displayed on site for 3 months post switch on.

4.3 Feasibility Study Submission Requirements

4.3.1 Where a new development is proposed that affects existing installation(s), the Planning Authority and Somerset County Council may require a Transportation Assessment report (TA) to be prepared.

4.3.2 The TA report will be checked and assessed by specialist teams in SCC. One of those teams will be the TCU, which will comment through the Safety/Technical Audit process.

4.3.3 Where a development requires new or modified signal installation(s), the Promoter of the scheme shall employ a Specialist Traffic Signal Designer to carry out a preliminary design of the signal installation(s) proposed. At this stage the Promoter must submit C.V's and Training records of all personnel involved with the design and configuration of the proposed installations for competency checks to be carried out.

4.3.4 Preliminary information to be submitted includes:

a) A general signal layout drawing at 1:200 scale showing the following:

- Proposed kerb lines, footways and islands;
- Proposed pole and signal head positions;
- Proposed crossing locations complete with tactile paving layout;
- Proposed road markings and road stud layouts.
- Proposed phasing/staging diagrams;
- Controller, feeder pillar, MEC & UPS locations
- A hard standing area for the parking of a maintenance vehicle.

b) Full input and output detail from Linsig analysis using the most current issued version of Linsig in electronic format. The analysis shall be carried out for A.M and P.M peak hour traffic flows (and any other local peaks). Full details shall be provided for the existing flows, flows at year of opening, flows at each development stage and normally flows 10 years after opening.

4.3.5 It may also be necessary to expand the Urban Traffic Control/SCOOT system and/or implement MOVA control. If this is a possibility the Promoter should speak to the Highway Authority's Highway Development Control Team or TCU (0300 123 2224) at an early stage in the study.

4.3.6 Following these discussions there may be a requirement to produce a Transyt, Saturn or Micro-Simulation model to demonstrate the effects of the proposal on the wider road network.

4.3.7 Specialist teams in SCC will carry out a Stage 1 Safety/Technical Audit on the outline proposals, and an audit report will be sent to the Promoter.

4.4 Detailed Design Submission Requirements

4.4.1 To enable the Highway Authority to fully assess the operational and safety implications of a proposed new traffic signal installation, the Promoter shall submit detailed plans, specifications and standard drawings showing the installation proposals.

4.4.2 The detailed information listed in the following sections shall be submitted in accordance with the approval process given in Table 4.1.

4.4.3 Documentary evidence of C.V's and Training records of all personnel involved with the installation of the proposed equipment, this is so that checks can be carried out to ensure compliancy with TA84/06.

4.4.4 Detailed Scheme Plan(s) at 1:200 scale shall be submitted by the Promoter, showing the following information as a minimum;

- Topographical survey of the existing site;

- Scheme layout including kerb-lines, traffic islands, footways, highway verge, embankment, cycle tracks, highway drainage etc.;
- Controller, feeder pillar, MEC & UPS locations
- All signal equipment symbols shall be to the industry standard;
- Pole location (annotated with pole type and number);
- Signal head location and orientation with phases annotated (symbol denoting aspect type);
- Pedestrian and/or cycle head location and orientation (symbol denoting aspect type);
- Pedestrian pushbutton(s) location and orientation, including tactile device where appropriate (symbol);
- Detector location (symbol denoting type, function and detector number),
- Extent of guard rails;
- Tactile paving, dropped kerb location and corduroy paving;
- Access chamber locations (annotated with type);
- Duct runs (annotated with number of ducts);
- Phase and Staging Diagram;
- Table showing equipment mounted on each pole;
- Intergreen Table;
- Detector Function Table;
- White lining and signing;
- Extent of Anti-skid surfacing;
- Traffic Regulation Orders, Waiting/Loading restrictions as appropriate;
- Location of drainage gullies;
- CCTV camera location;
- A hard standing area for the parking of a maintenance vehicle.

4.4.5 Standard Details shall be submitted by the Promoter detailing the construction specification, setting out and installation of;

- The controller foundation,
- Chamber, Cover and Frame types to be used,
- Trench reinstatement details,
- Signal Poles,
- Tactile paving,
- Sub-surface detection systems, including distances from stop lines, nearside kerb lines and lane lines,
- Larger scale pedestrian and/or cycle island layouts,
- Setting out details (relationship between poles, stop lines, tactile paving, crossing studs, etc.)
- CCTV mast and mast arm foundation/installation details where applicable.

4.4.6 A Civil Works Specification shall be submitted by the Promoter.

- The specification shall cover all civil works involved in the scheme. The following sections of this document give detailed guidance on requirements in Somerset.

4.4.7 A Signal Equipment Specification shall be submitted by the Promoter.

- The specification shall cover all signal equipment that it is proposed to install. The following sections of this document give detailed guidance on requirements in Somerset.

4.4.8 Controller Specification

The Promoter shall supply the following controller specification information as appropriate:

- MCH1827B controller specification
- At staggered mid-block crossings if two red lamps fail on one crossing side then both crossing sides of the installation will extinguish.
- At signalised junctions incorporating a remote pedestrian facility, if the remote facility extinguishes due to two red lamps failing the junction shall remain on.
- Somerset have now standardised the green man (invitation to cross) appearance at all nearside technology installations to 6 seconds, unless the promoter can demonstrate a good reason as to why this should not be appropriate.
- The appearance type for all pedestrian phases at signal installations is to be type 1 (only appears if demand exists at start of stage). Unless the promoter can demonstrate a good reason as to why this should be appropriate.
- MOVA data set
- Somerset standard DFM groups are as follows: -

SCOOT loops: -	no group
All main road loops: -	30m Active 18hrs Inactive
Private access loops: -	To be agreed on a site by site basis
All main road MVD's: -	30m Active18hrs Inactive
Private access MVD's: -	To be agreed on a site by site basis
Magnetometers: -	30m Active 18hrs Inactive
Push Buttons: -	10m Active/ Inactive time on a site by site basis.
Kerbsides: -	90m Active 96hrs Inactive – 1.0s ext. Inverted.
On Crossings: -	30m Active 18hrs Inactive – 1.0s ext. Inverted
Tactile Devices: -	5m Active 96hrs Inactive*

All the above must be in their own Detector Fault monitoring group so that any fault can be easily identified.

*This Inactive time may well be adjusted to suit the specific site conditions.

4.5 Scheme Drawings

4.5.1 All scheme drawings to an appropriate scale of 1:200 shall be provided in AutoCAD format and at a scale of 1 drawing unit to 1.000m. Please contact TCU for our current version of AutoCAD.

4.5.2 The AutoCAD drawing(s) shall contain the following layers as a minimum requirement:-

LAYER NAME	COLOUR (as seen on paper)	LINE STYLE	LAYER SWITCH
Base	(Magenta)	continuous	'on'
Signals	(Blue)	continuous	'on'
Ducts	(Green)	dashed	'on'
Loops	(Red)	continuous	'on'
Frame	(Black)	continuous	'on'
Number	(Black)	continuous	'on'
Studs	(Black)	continuous	'on'
Lining	(Black)	continuous	'on'
Detail	(Cyan)	continuous	'off'
Tactpave	(Red)	continuous	'on'

4.5.3 The Contractor shall supply a printed copy together with an AutoCAD digital file and Adobe pdf image file in an electronic format acceptable to the TCU, of an as built scheme drawing marked in the issued column "Original as built".

4.5.4 The completed as built scheme drawing shall include as a minimum:-

- A plan up to the highway boundary including any relevant private accesses.
- A cable schematic layout for LV, ELV and detector cables.
- The stage diagrams and a cyclic order diagram where the sequence is not standard.
- A MOVA link/lane relationship diagram where appropriate.
- The location of the Controller, ESH, telecommunications, white lining, signal poles, signal heads, PEC, PDU's, chambers, duct runs and detection all with identification labels (upper case only).

4.5.5 Traffic Control symbols shall follow those shown in the latest issue of TR2206.

4.5.6 The Somerset County Council installation alphanumeric site reference number shall be printed within the title block of the scheme drawing.

4.5.7 A north point shall always be clearly shown, together with all associated road and street names and road numbers where available.

4.5.8 Tactile paving for all pedestrian crossings shall be shown, precisely, as built, using an outline together with any studded pedestrian crossing areas and shall

conform to "Guidance on the use of Tactile Paving Surfaces" published by the DfT and as set out in standard drawing numbers SCC-TS-SD006/SD007/SD008

4.5.9 Zigzag carriageway markings shall conform to the latest version of “The Zebra, Pelican and Puffin Pedestrian Crossing Regulations and General Directions”. As per TSRGD schedule 14 part 2 Item 51 Diagram 1001.3 Variant 2. The centre zigzag need to be reversed to be a mirror image of the nearside.

4.5.10 The markings may be increased between 8 - 18 marks if a site is deemed to have potential safety risks. Markings may be also be decreased to a regulation minimum of two marks from the standards at the discretion of the Engineer. Where site conditions dictate such as at a road junction, markings for the nearside, centre and offside may be of different lengths and placed as an odd number if necessary.

4.5.11 The labelling of loop configurations shall follow an accepted style of "phase-type-lane". For example:-

- AXYZ1 will indicate that the three loops (system 'D') of a phase are connected to one channel of detection in lane 1. AX1 and AYZ1 imply that the approach (system 'D') is split to two separate channels of detection.
- ASA1a and b are the leading and trailing loops of an Speed Assessment installation associated with phase A.
- ASL1 for stop line loops.
- AQ1 for queue loops.
- ACC for call/ cancel loops these are not usually lane associated but a number will be used where there are multiple call cancel loops for that phase.
- MOVA loops will use the same system with M after the phase letter, for example AMI2 means, phase A, MOVA–IN loop, detector input 2.
- N10121E1 is a SCOOT loop and has its own 8 figure alpha numeric mnemonic relevant to the UTC system area, region, node, stage and link.

This labelling shall correlate with the MCH1827B data forms detector notation.

4.5.12 The naming of MOVA detectors shall be sequential by approach and phase so that detectors in different lanes on the same approach are on the same card to reduce crosstalk and to aid the testing and investigation of detector problems. This is a departure from the MOVA application guide on detector naming.

4.5.13 The labelling of above ground detection follows the same style but with a difference of "phase-type-pole number". For example:-

- BMVD2 is phase B Microwave vehicle detector on pole 2.
- BOC2 for an on-crossing detector,
- BKS2 for a kerbside detector.

This labelling shall correlate with the MCH1827B data forms detector notation.

4.5.14 Stop line markings shall normally be 200 mm wide. If the stop line is to the alternative dimension of 300 mm wide (high speed, rural, or exceptional circumstances) then the drawing shall identify this accordingly.

4.5.15 Any subsequent alteration, post SAT, amendment, modification, or addition to the drawing shall carry a revision letter and be clearly dated.

4.5.16 A dashed line shall indicate all 100mm diameter ducting with the legend "xNo." adjacent to or forming part of the line to show multiple ducts. 50mm ducting is only to be used between the CLB and the associated chamber and shall be shown as a continuous line.

4.5.17 Where the installation uses parallel stage streaming, stream legends shall be placed appropriately within the drawing using rectangular boarder labels, for example:-

STREAM 1

4.5.18 Where the colour layering of the scheme drawing is set with the original CAD issue this colour selection shall be closely adhered to for any addition, alteration, amendment, modification to the drawing.

4.5.19 All dimensions shall be within appropriate tolerances set out and shown in tables contained in the documents defined in section 1 unless specifically defined in a drawing issued with a contract or an appended drawing.

4.6 Modelling

The Promoter shall supply full input and output of the following modelling information as a minimum. Unless an appropriate reason can be given this should be in the form of the electronic Linsig file itself.

4.6.1 The current issued version of Linsig shall be used to model the junction/s operation, for AM and PM peaks on, existing situation, year of proposed opening, each development stage (if applicable), and normally 10 years post opening. Included in this must be accurately predicted traffic growth figures for the development as well as local traffic growth as agreed with the Highway Authority. It is expected that the migration of traffic to other more attractive routes or from more congested areas as well as latent demand from traffic and vulnerable road users who may start to use such newly installed facilities must also be identified and taken into account in any modelling.

4.6.2 Somerset is predominately a rural county and contains within it a large concentration of agricultural farmland. The result of this is that many journeys between farms and nearby land is carried out by large agricultural equipment and these vehicles are not only large but slow. The route of these vehicles quite often takes them through towns such as Bridgwater, Shepton Mallet, Yeovil, Street, Chard & Taunton to name a few and it is not uncommon for a procession of these

vehicles to travel through these and other towns during the peak hours. We have derived that because of this we do not subscribe to the Linsig default PCU value of 5.75m but have increased this to 6.0m. Therefore all Linsig models that arrive with the wrong PCU value contained in it will be rejected and a revised one will be requested with correct figures included so that the audit can be carried out. We would also expect the model to be calibrated in so far as sat flow is concerned.

4.6.3 We would also draw attention to studies carried out and reported at the JCT Symposium in 2014 & 2015 with regards to lane merging following a stop line, which shows that at best a nearside/offside %age split in lanes prior to the stop line of 73/27 can be expected. It concluded that traffic in the nearside lane is predictable with the following: Fn=0.735*Fr Where Fn is the nearside lane flow and Fr is the total flow. Observations in Somerset has concluded that we fully subscribe to this equation and therefore any designs that incorporate lanes merge will need to show these splits in the Linsig model. If these splits are not shown then this will need to be accompanied by evidence to show why, otherwise the model will be rejected and a revised one will be requested with correct figures included so that the audit can be carried out.

4.6.4 In Linsig one of the most critical parameters is the lane width and having communicated with JCT they inform us that this dimension should be taken across the lane at a distance 10m from the stop or give way line and not as commonly taken at the stop line itself. This is primarily because the geometry of a signalised junction normally incorporates flares as well as radii for the left turning traffic and these carriageway late kerb line changes can heavily distort the actual sat flow. Although 10m back may still be within the flare JCT believe that at this point traffic would be at a nominal speed when approaching the stop line. If during checking it is found that the lane widths have not been taken from the preferred dimension of 10m from the stop or give way line, then this will need to be accompanied by evidence to show why, otherwise the model will be rejected and a revised one will be requested with correct figures included so that the audit can be carried out.

4.6.5 In some cases, Saturn or Micro-Simulation models may be required. Specification of this type of analysis will be carried out on a job by job basis.

4.7 Factory Acceptance Test (FAT)

4.7.1 The Promoter or Specialist Traffic Signal Designer shall be responsible for facilitating and co-ordinating the FAT, in full consultation with the Traffic Control Engineer. The Contractors and Engineers normal FAT shall be conducted at the configuration engineer's premises. The Traffic control engineer and the design/configuration engineer must be present. The Contractor shall provide all necessary test equipment in a suitable environment set aside for the purpose. and to sign the Engineers FAT document containing any agreed actions to complete the test. Additional tests may be required at the discretion of the Engineer.

4.7.2 It is imperative that the manufactured controller/s hardware is fully tested with the approved tested configuration running in it/them. Often the configuration is tested on a computer and has to have the Configurator present to carry out any amendments necessary. Once the Highway Authority is satisfied that the configuration is running safely and efficiently, then the configuration/s can be loaded onto the actual controller/s being supplied for testing. The Promoter shall ensure that all equipment and configuration/s to be tested are operating correctly, prior to requesting the Traffic Control Engineer to be present at the FAT. Where the Traffic Control Engineer is requested to attend an FAT and it is established that insufficient prior testing has occurred, then the Promoter will be liable to reimburse the Highway Authority for all reasonable costs associated with the Traffic Control Engineer's presence at that test.

4.7.3 If the Traffic Control Engineer is called to an FAT and finds within one hour of arrival that all necessary work is not satisfactorily completed, the FAT will be terminated. Then the Promoter will be liable to reimburse the Highway Authority for all reasonable costs associated with the Traffic Control Engineer's presence at that test.

4.7.4 The Traffic Signal Controller supplier shall arrange the Factory Acceptance Test (FAT) on each of the traffic signal junction controller/s supplied under the Contract with the approved tested configuration/s running in it/them. The Specialist Traffic Signal Designer (Configuration) and the Traffic Control Engineer shall both be present at the FAT.

4.7.5 The Traffic Signal Controller Manufacturer and the Specialist Traffic Signal Designer shall ensure the Traffic Control Engineer is supplied with an FAT certificate, a green/green conflict test certificate and a hard copy of each controller/s configuration/s. These documents shall be handed over to the Traffic Control Engineer at least one week before the date of the Site Acceptance Test (SAT).

4.7.6 The Traffic Control Engineer shall be consulted on the date of the FAT and be given at least four weeks' notice of the date for the FAT.

4.7.7 It is the responsibility of the Promoter or Specialist Traffic Signal Designer to arrange the FAT with the Traffic Control Engineer, and to book time on an emulation computer if appropriate.

4.7.8 The traffic signals controller supplier shall perform its controller/s tests and green/green conflict tests in the factory and on the actual controller/s to be supplied, not just on the emulator software. The green/green conflict tests shall be carried out on the junction controller/s prior to installation, using a relevant test unit that complies with the current IEE Regulations.

4.7.9 All specified junction controller/s functions given within this document and within the MCH1827B specification are to be demonstrated to the satisfaction of the Traffic Control Engineer.

4.7.10 Factory Acceptance Tests for Pelican, Puffin and Toucan controllers do not normally require the presence of the Traffic Control Engineer. These controllers must be supplied with a FAT certificate signed by the manufacturer, listing all safety checks that have been carried out. These checks shall include the green/green conflict test.

4.7.11 The manufacturer and the Specialist Traffic Signal Designer shall ensure the Traffic Control Engineer is supplied with an FAT certificate and a green/green conflict certificate at least one week before the date of the SAT.

4.7.12 All specified Pelican, Puffin or Toucan controller functions given within the MCH1827B specification are to be tested and certificated at the Factory Acceptance Test.

4.7.13 No traffic signal controller shall be allowed onto the site without a current and valid FAT certificate being in place. Under no circumstances will the FAT be conducted with the controller in situ.

4.8 Supervision during Construction

4.8.1 Where work is being carried out on existing installation/s, the Principal Contractor or the Specialist Traffic Signal Installation Sub-Contractor may require access to existing equipment. Where this is the case the contractor(s) shall give the TCU a minimum of two weeks' notice. A member of the TCU will attend the site to supervise entry. (Contact 0300 123 2224).

4.8.2 Where it is necessary to switch off an installation/s (i.e. for traffic management purposes), the Principal Contractor shall give the TCU a minimum of two weeks' notice of the switch off date. (Contact 0300 123 2224).

4.8.3 Where equipment is to be disposed of, the Principal Contractor shall give the TCU a minimum of two weeks' notice of the date the installation is to be decommissioned. A member of the TCU and the Somerset County Council Term Maintenance Contractor's engineer will attend site to decide which items of

equipment are to be salvaged for spare parts. The SCC Term Maintenance Contractor will remove the salvaged equipment from site. (Contact 0300 123 2224).

4.8.4 The Promoter and/or the Principal Contractor are responsible for all civil works associated with the traffic signal installation. The Promoter/Principal Contractor shall provide competent and qualified site supervision during the construction/installation of the traffic control installation. The Promoter/Principal Contractor shall demonstrate the competence of their supervisory staff and supply the names, CV's and training records of all the personnel supervising the work. The level of supervision shall ensure that the standard of civil works complies with this specification for Highway Works.

4.8.5 The Promoter and/or the Principal Contractor are responsible for the traffic signal equipment installation works and the activities of the Specialist Traffic Signal Installation Sub-Contractor. The Specialist Traffic Signal Installation Sub-Contractor shall provide competent and qualified on-site supervision during the installation of the traffic control equipment. The Specialist Traffic Signal Installation Sub-Contractor shall demonstrate the competence of their supervisory staff and supply the names, CV's and training records of all the personnel supervising the work. The level of supervision shall ensure that the standard of traffic control equipment installation complies with this specification, the Design Manual for Roads and Bridges and Local Transport Note 1/98.

4.8.6 For all schemes the Principal Contractor and their Specialist Traffic Signal Installation Sub-Contractor shall meet with the Traffic Control Engineer at the start of the scheme. At this meeting the Contractors will be made fully aware of the requirements of the Traffic Control Engineer. Not only will an early meeting be an opportunity for the Principal Contractor and their Specialist Traffic Signal Installation Sub-Contractor to provide the necessary competency documentation but it will almost certainly help avoid abortive work.

4.8.7 Where on-site conditions require changes to the approved installation layout the Promoter shall first check with the TCU that these changes to the design are permitted. If this change is agreed in principle, a member of the TCU will attend site within a suitable time period, to approve an acceptable solution. (Contact 0300 123 2224).

4.8.8 The TCU will supply specialist supervision/inspection services on behalf of the Highway Authority. The way that snags and deviations from the specification will be reported, will vary depending on the type of scheme. The normal supervision/inspection lines of communication will be as follows:

Traffic Signal Schemes Promoted by SCC's TCU:

The Traffic Control Engineer will supply a list of all snags found to the Principal Contractor direct. The Principal Contractor shall then arrange for the snags to be rectified.

NB. The Final SAT certificate will not be issued until all snags are rectified to the satisfaction of the Traffic Control Engineer.

4.8.9 Traffic Signal Schemes Promoted by Developers Under Agreement and Traffic Signal Schemes Promoted by SCC's Minor Capital Works Team.

The Traffic Control Engineer will supply a list of all snags found to SCC's Supervision Team for onward transmission to the Principal Contractor. The Principal Contractor shall then arrange for the snags to be rectified.

4.8.10 Traffic Signal Schemes Promoted by SCC's Major Capital Works Team

The Traffic Control Engineer will supply a list of all snags found to SCC's Project Manager, or other nominated person, for onward transmission to the Principal Contractor.

NB. The Final SAT certificate will not be issued until all snags are rectified to the satisfaction of the Traffic Control Engineer.

4.8.11 For major schemes the Traffic Control Engineer will inspect the signal installation(s) during construction and shall be afforded full access to all works associated with the signal installation(s) including ducting, chamber and cabinet works. The Principal Contractor shall arrange for site inductions to be carried out (or provide an escort for the Traffic Control Engineer). The stages and frequency of visits are shown in Table 4.2. It is the Principal Contractor's responsibility to request visits by the Traffic Control Engineer at the appropriate stage as shown in the table. The reason for the visit is also shown, and the Principal Contractor shall ensure that those activities listed can be carried out during the visit.

4.8.12 For all other schemes the Traffic Control Engineer will inspect the signal installation(s) during construction by carrying out spot checks. The Traffic Control Engineer will notify the Principal Contractor prior to going to site and shall be afforded full access to all works associated with the signal installation(s) including ducting, chamber and cabinet works. The Principal Contractor shall arrange for site inductions to be carried out (or provide an escort for the Traffic Control Engineer). The stages and frequency of the visits are shown in Table 4.2, as are the reasons for the visit. The Principal Contractor shall ensure that those activities listed in the table can be carried out during the visit.

TABLE 4.2 – Site Inspections to be Carried Out by SCC Traffic Control Unit

SCHEME STAGE	FREQUENCY	REASON FOR VISIT	ATTENDED BY
Pre-Construction meeting	One visit	Discuss setting out & construction details with contractor and other issues relating to traffic management and the Site Acceptance Test. Site inductions carried out, or instructions for carrying out future visits along with relevant contact details supplied	Principal Contractor / Specialist Traffic Signal Installation Sub-Contractor / Signal Installation Designer /Traffic Control Engineer
Inspections of Signal Related Civil Works During Construction	As required	Check pole retention sockets, chamber surrounds, duct type, bedding and depth, kerb upstands	Principal Contractor / Signal Installation Designer /Traffic Control Engineer
Inspections of Signal Equipment and Associated Works During Construction	As required	Check condition, verticality, position and orientation of poles. Check road markings, studs, tactile paving and above ground equipment	Principal Contractor / Specialist Traffic Signal Installation Sub-Contractor / Signal Installation Designer /Traffic Control Engineer
Pre-Commissioning check	As required	To verify that the whole junction is ready for Site Acceptance Test	Principal Contractor / Specialist Traffic Signal Installation Sub-Contractor / Signal Installation Designer
Site Acceptance Test	As required	To carry out operational tests and checks on signal installation	Specialist Traffic Signal Installation Sub-Contractor / Signal Installation Designer /Traffic Control Engineer
Re-test of Remedial Measures	As required	If the signal installation failed first Site Acceptance Test	Principal Contractor / Specialist Traffic Signal Installation Sub-Contractor / Signal Installation Designer /Traffic Control Engineer

4.9 Site Acceptance Test (SAT)

4.9.1 The Principal Contractor shall be responsible for facilitating any tests required by the Traffic Control Engineer.

4.9.2 The Promoter shall ensure that all equipment installed is fully tested and operating correctly at least 24 hours prior to the Traffic Control Engineer being present at a site acceptance test. This includes all communication lines for the Remote monitoring and UTC equipment. Where the Traffic Control Engineer is requested to attend an SAT and it is established that insufficient prior testing has occurred, then the Promoter will be liable to reimburse the Highway Authority for

all reasonable costs associated with the Traffic Control Engineer's presence at that test.

4.9.3 If the Traffic Control Engineer is called to site and finds within one hour of arrival that all necessary works are not satisfactorily completed, the SAT will be terminated, then the Promoter will be liable to reimburse the Highway Authority for all reasonable costs associated with the Traffic Control Engineer's presence at that test.

4.9.4 The Promoter shall organise a SAT at each new traffic signal installation. The Traffic Signal Installation Contractor/Sub-Contractor and the Traffic control engineer shall be present at this test. The SAT shall be conducted by the Traffic Control Engineer, who will ask for a sequence of tests to be demonstrated by the Specialist Traffic Signal Installation Contractor/Sub-Contractor. On successful completion of the SAT, the Specialist Traffic Signal Installation Contractor/Sub-Contractor shall provide the completed original copy of the Site Acceptance Test certificate to the Traffic Control Engineer, signed by the Specialist Traffic Signal Installation Contractor/Sub-Contractor and the Traffic Control Engineer.

4.9.5 The SAT shall be conducted when all elements of the installation/s are considered by the Traffic Control Engineer and Somerset County Council's Term Maintenance Contractor to be complete. This includes all associated civil works (ducting, chambers, tactile paving etc), road markings, in-station connections and configurations.

4.9.6 The SAT will only be conducted when all of the documents shown with an asterisk in Appendix 3 have been passed onto the Traffic Control Engineer:

4.9.7 The SAT will NOT be carried out on Fridays or Saturdays. The normal days to carry out SAT's are Monday – Thursday, however the TCU realises that on occasion's traffic conditions dictate that it would be best to carry out a SAT on a Sunday and as such the Promoter shall consult at an early stage for this to be arranged. The promoter shall pay all reasonable costs incurred by the Traffic Signal Installation Contractor/Sub-Contractor, Somerset County Council's Term Maintenance Contractor and the Highway Authorities staff for attending any SAT on a Sunday.

4.9.8 For health and safety reasons and as far as reasonably practicable SAT's shall ONLY be carried out during daylight hours. If a SAT is started in daylight hours but may not finish before dusk then the SAT may, at the instruction of either the Traffic Signal Installation Contractor/Sub-Contractor or the Traffic Control Engineer, be adjourned until such time as completion of the SAT during daylight hours is possible. A SAT will NOT be started during either the hours of darkness or if the weather is deemed to be unsuitable.

4.9.9 If during the SAT the weather becomes inclement then The Promoter or Principal Contractor shall provide a shelter to protect the sensitive electronic equipment from the effects of the weather when testing.

4.9.10 If during the SAT Somerset County Council's Term Maintenance Contractor is not satisfied with any aspect of the installation then they will not take on the maintenance and the SAT will be terminated and the site left off until such time as Somerset County Council's Term Maintenance Contractor is satisfied the site is completed to their satisfaction. During this time The Promoter or Principal Contractor will ensure that the site is bagged over.

4.9.11 The Promoter's Principal Contractor or its sub-contractors shall not leave the junction open to traffic, under the control of the installation, until a Final Site Acceptance Test Certificate has been issued. The Final Site Acceptance Test Certificate will not be issued until all snags identified have been resolved to the satisfaction of the Traffic Control Engineer.

4.9.12 A copy of the Earth Loop Impedance test schedule for the controller and all poles shall be supplied to the Traffic Control Engineer before the SAT commences.

4.9.13 A copy of the installation cabling schedule shall be provided to the Traffic Control Engineer a maximum of 7 days after the SAT.

5 Approved Suppliers and contractors

5.1 Specialist Sub-contractors

5.1.1 The supply and installation of traffic control equipment in Somerset shall only be undertaken by a Specialist Traffic Signal Installation Sub-Contractor approved by the TCU. A competency check will be carried out by the TCU to check that the Specialist Traffic Signal Installation Contractor/Sub-Contractor complies fully with the TA84/06 'Code of Practice for Traffic Control and Information Systems for All-Purpose Roads'. In order for the TCU to carry this check out, relevant CV's and training records of all personnel who will be employed by the Specialist Traffic Signal Installation Contractor/Sub-Contractor shall be submitted to the Highway Authority so that approval for the personnel can be given.

5.1.2 A list of approved Traffic Signal equipment suppliers and installation contractors is available from the TCU.

5.1.3 All work involved with the existing Somerset County Council owned UTC/SCOOT, MOVA,VMS, VAS and CCTV systems shall only be carried out by contractors nominated by the SCC TCU.

5.1.4 The Principal Contractor shall be responsible for placing all orders and for the payment of all accounts in respect of the Specialist Traffic Signal Installation Sub-Contractor.

5.2 Disclaimer

5.2.1 The Highway Authority and/or its Agents shall not accept responsibility as to the performance of any supplier or contractor on its approved list.

6 Health and Safety

6.1 General

6.1.1 Traffic signal installation works always fall under the current version of the Construction Design and Management Regulations. The Promoter, the Specialist Traffic Signal Designer, the Principal Contractor and all Sub-Contractors shall adhere to the requirements of these Regulations.

6.1.2 The Promoter, Specialist Traffic Signal Designer and/or the Principal Contractor shall ensure that all systems are designed so that they can be constructed and maintained safely. Any particular safety issues that require special attention shall be highlighted, and risk assessments and method statements prepared. This is of particular relevance with regards the proximity and access to and from the maintenance bay areas and access to non-standard height poles. These shall be incorporated into the Construction Phase Health and Safety Plan. The Promoter, Specialist Traffic Signal Designer and/or the Principal Contractor and all Sub-Contractors shall comply with the Somerset County Council bylaws, all regulations, instructions and notices.

6.1.3 When working within the confines of the Somerset County Council buildings all employees shall wear visitor identification badges.

6.1.4 All personnel working on the Highway Authorities traffic control systems shall be Sector 8 accredited to the relevant level for the works they are undertaking.

6.1.5 All personnel working on the Highway Authorities traffic control systems shall wear the appropriate Personal protective equipment or as required by the principal contractor.

6.1.6 The Promoter, Specialist Traffic Signal Designer and/or the Principal Contractor shall be fully aware of and comply with the requirements of all relevant Health and Safety legislation listed in the following documents:

- Design Manual for Roads and Bridges, Volume 8, Section 1, TD 24/97
- Design Manual for Roads and Bridges, Volume 6, Section 2, TD 50/04
- Design Manual for Roads and Bridges, Volume 8, Section 1, TA 84/06
- Design Manual for Roads and Bridges, Volume 8, Section 1, TA 82/99

All as amended and updated from time to time.

And comply with any other legislation or standards that are applicable to this field of work.

6.1.7 Controller(s) cabinet door(s) shall be closed and secured whenever unattended. Unattended is defined as not in the immediate vicinity of the controller or any live exposed conductor. It will not be acceptable to be a distance away making it impossible to take avoiding action should any person attempt to interfere with any live equipment. If for whatever reason this is not possible, the Contractor shall

position suitably signed temporary safety barriers around the controller or any live conductor.

6.1.8 An area adjacent or surrounding the Controller(s) shall be provided for parked vehicles (minimum long wheel based transit) to allow future maintenance of the traffic control system. If there is only verge then this will need to be strengthened using a system of reinforced grass protection.

6.1.9 A hard standing or paved area shall be provided around the controller service area, and needs to be a minimum of 2m from any edge of the equipment, to afford easy access to all equipment (including use of ladders & MEWP) even when service doors are fully opened. The whole area needs to be completely contained within the limits of the adoptable public highway.

6.1.10 A hard standing or paved area shall be provided surrounding all traffic signals poles and be a minimum distance of 2m from the pole in all directions.

6.1.11 Non-standard height and folding traffic signal poles shall be provided with a hard standing area as above in 6.1.9 and in addition shall include hard standing area to accommodate the pole in its horizontal maintenance position.

7 Electrical Installation and Power Supply

7.1 IEE Regulations

7.1.1 Traffic Signal equipment shall comply with BS EN 12368:2006 (was BS 505:1990) as amended by Department for Transport Specification TR 0102 and the current IEE Wiring Regulations Seventeenth Edition (BS7671:2008.

7.1.2 The above documents are amended or updated from time to time. The versions that are currently in force shall be used for Traffic Control work.

7.1.3 The completed installation shall be electrically tested in accordance with IEE regulations and an Electrical Completion Certificate shall be issued to the Highway Authority prior to the commencement of an SAT. A typical example of an Electrical Completion Certificate is given in Appendix 2. Under No circumstances will the Highway Authority accept an installation for SAT that does not have this signed certificate.

7.1.4 Where a new electricity supply is being provided for an installation, the supplying Electricity Company may require the Promoter's Specialist Traffic Signal Installation Sub-Contractor to complete the Electricity Company's 'Notice of Completion of Installation'. Power will not be connected until a number of days after submission of the Notice. It is the Promoter's responsibility to ensure that the Notice is completed and returned to the Electricity Supply Company.

7.2 Electricity Supply

7.2.1 The Principal Contractor shall provide and install an Electricity Supply Housing (ESH) cabinet within the vicinity of each controller, for the termination of the electricity supply.

7.2.2 The Principal Contractor shall arrange for the provision of a permanent, 240v 50Hz AC single phase electricity supply for each controller.

7.2.3 The supply must be a direct independent connection to the electricity distribution network, NOT in series with a street lighting column, illuminated sign, internally illuminated bollard, etc.

7.2.4 The electricity supply will be provided and terminated by the local power distribution company within the ESH.

7.2.5 The cabinets shall be galvanised, factory-finished in black and complete with root. The ESH shall be of sufficient size to provide space for the mounting of the electricity providers 100A cut-out and smart meter and a double isolator switch which can be locked when isolated. It shall have a preservative treated wooden backboard fitted. The case shall be made of 3mm galvanised steel to BSEN ISO 1461 powder coated black. It shall have a vandal and weather proof hinged door and locking system acceptable to the Engineer.

7.2.6 All new electricity supplies shall be smart metered. Unmetered supplies are not accepted by the authority, regardless of the final wattage of the proposed installation.

7.2.7 The Principal Contractor shall obtain an accurate, detailed and auditable inventory of all equipment drawing a load at the installation from their Specialist Traffic Signals sub-contractor and make available to the Distribution Network Operator (DNO).

7.2.8 The Specialist Traffic Signal Installation Sub-Contractor shall connect the controller power supply units to the main power supply in the external cabinet. The Specialist Traffic Signal Installation Sub-Contractor shall be suitably qualified and certified by the local electricity distribution company for making a connection to the mains supply from the cut-out provided within the termination box to the controller. The connection cable between the consumer side cut-out and the controller shall conform to the current issue of BS7671 and shall be double insulated with a minimum conductor CSA as required by the system load.

7.2.9 The Specialist Traffic Signal Installation Sub-Contractor is to ensure that the electricity distribution company has installed the correctly rated BS88 HRC (High Rupturing Capacity) cartridge fuse into the ESH when connecting the power supply.

7.2.10 The cable and fuse ratings are to be calculated by The Specialist Traffic Signal Installation Sub-Contractor and documentation supplied to the Engineer to verify the values for each installation.

7.3 Distribution Network Operator

7.3.1 Within the County of Somerset there are two Distribution Network Operators (DNO's). Their geographical boundaries are not consistent with those of SCC. However, the vast majority of the County is serviced by Western Power Distribution. Scottish & Southern Electric services parts of the County towards the eastern fringes (e.g. Frome and Yeovil). For advice on which geographical area any proposed installation works are to take place, please contact TCU on 0300 123 2224.

7.4 Western Power Distribution

7.4.1 The Principal Contractor shall arrange for the provision of a permanent, smart metered, 240V, 50Hz AC, single phase electricity supply for each controller, housed in the ESH for the exclusive use of the traffic signals and associated equipment.

7.4.2 The contact telephone number for a new supply is 0845 601 2989. A site address, site postcode and company details (for the invoice) will need to be provided, in return for a quotation reference number.

7.4.3 On accepting and paying for this quoted work, a Metering Point Administration Number (MPAN) will be issued. This will be needed for the connection and to obtain an electricity smart meter.

7.4.4 The Principal Contractor will also have to arrange for the installation of a smart meter within the ESH. The smart meter is supplied and fitted by the electricity supplier (i.e. EDF Energy, British Gas, Southern Electric, etc.). The Principal Contractor will be responsible for the installation costs and for paying the electricity bill from inception to handover at the end of the Scheme Maintenance Period.

7.4.5 On completion of the installation of the power supply, the ESH shall be sealed at the base by the specialist Traffic Signal Installation Sub-Contractor resist the ingress of moisture, insects and rodents.

7.4.6 At the end of the maintenance period the electricity supplier will change to that used by Somerset County Council (currently British Gas) and the Principal Contractor will no longer be responsible for payment of the bill. It is the responsibility of the Principal Contractor to transfer the account; this process can take up to 4 weeks. Please phone the TCU on 0300 123 2224 to discuss the arrangements for transfer.

7.5 Scottish & Southern Electric (Southern Electric in England)

7.5.1 The Principal Contractor shall arrange for the provision of a permanent, smart metered, 240V, 50Hz AC, single phase electricity supply for each controller, housed in the ESH for the exclusive use of the traffic signals and associated equipment.

7.5.2 The contact telephone number for a new supply is 0800 048 3516. A site address, site postcode and company details (for the invoice) will need to be provided, in return for a quotation reference number.

7.5.3 On accepting and paying for this quoted work, a Metering Point Administration Number (MPAN) will be issued. This will be needed for the connection and to obtain an electricity smart meter.

7.5.4 The Principal Contractor will also have to arrange for the installation of a smart meter within the ESH. The smart meter is supplied and fitted by the electricity supplier (i.e. EDF Energy, British Gas, Southern Electric, etc.). The Principal Contractor will be responsible for the installation costs and for paying the electricity bill from inception to handover at the end of the Scheme Maintenance Period.

7.5.5 On completion of the installation of the power supply, the ESH shall be sealed at the base by the specialist Traffic Signal Installation Sub-Contractor resist the ingress of moisture, insects and rodents.

7.5.6 At the end of the maintenance period the electricity supplier will change to that used by Somerset County Council (currently British Gas) and the Principal Contractor will no longer be responsible for payment of the bill. It is the responsibility of the Principal Contractor to transfer the account; this process can take up to 4 weeks. Please phone the TCU on 0300 123 2224 to arrange the transfer.

8 Traffic Signal Equipment Requirements and Standard Practices

8.1 General

8.1.1 All traffic signal equipment shall be supplied in new unused condition, complete with all ancillary parts required to allow SAT of the installation. The equipment shall be of the latest specification pertinent to that piece of equipment.

8.1.2 All new traffic signal equipment shall have, as a minimum, a one-year unconditional manufacturer's warranty for all parts and labour.

8.1.3 The Promoter shall honour all guarantees or warranties offered by third party suppliers of traffic signal equipment and shall arrange at their own expense for the replacement and installation of any equipment being replaced under warranty.

8.1.4 The traffic signal controller cabinets and all traffic signal poles shall be conspicuously labelled. The pole numbers shall all be visible from the controller position and shall be located on the pole just below the bottom fixing kit position or bottom bracket. Signal poles shall be numbered clockwise from the controller, any variation following modification and amendment works shall be corrected on scheme drawing re-issues.

8.1.5 Labels shall be manufactured of waterproof self-adhesive vinyl, and applied after the controller/pole surface has been cleaned. The characters are to be 50mm high, white on black in Transport Medium font. The black backing tile should be at least 10mm wider than the widest part of the character. The controller shall be marked with the site reference number, supplied by TCU (on one tile), and the poles numbered in accordance with the relevant drawing.

8.1.6 All cabling is to be clearly tagged and detector channels are to be permanently labelled with the appropriate detector name.

8.1.7 All optical street furniture on new installations shall use approved LED equipment.

8.1.8 Replacements on existing installations shall comply with the latest enhanced optic or LED specification as directed by the Engineer. The provision of low energy optical street furniture shall be used in preference to systems requiring higher energy usage.

8.1.9 Where signal heads are fitted with High Intensity Tungsten Halogen lamps they shall be 12V, 50W to specification M32 with a lumen output of 850.

8.1.10 Where new PDU 'wait' lamps are fitted they shall be LED units.

8.1.11 Only lamps approved by the TCU shall be supplied.

8.1.12 To allow for the precise location of PDU's, signal poles shall be issued without holes drilled for mounting these units.

8.1.13 All PDU's NPI's (Nearside Pedestrian Indicators) and similar units shall be installed using the manufacturer's standard stainless steel U bolts.

8.1.14 Where the PDU is required to have an audible indicator and a tactile unit together the tactile unit shall be fitted on the right, as viewed from the front.

8.1.15 Orientation of PDU's shall be strictly in accordance with the scheme drawing; if there are any doubts then the TCU shall decide. The height above ground level to the centre of the pushbutton shall be within the range 1.0 to 1.1m in line with the centre of the front face (gradient taken into account).

8.1.16 All NPI's shall be orientated in accordance with drawing number SCC-TS-SD010 at 30° from a line by the signal pole which is parallel to the kerb or tangential to the radius and not at right angles to the crossing. This is because crossings on radius kerbs would have the indicator facing away from the pedestrian waiting to cross. Reduced angle of view NPI's may be required to avoid see-through onto adjacent crossings. Each indicator will be reviewed by the TSU Engineer.

8.1.17 High level repeater NPI's where specified by the Engineer shall be mounted at 45° in accordance with the requirements of section 8.1.16 (drawing No. SCC-TS-SD010 refers).and the height above ground level to the underside of the unit, in line with the centre of the front face (gradient taken into account) shall be 1.8m. Reduced angle of view NPI's may be required to avoid see-through onto adjacent crossings. Each indicator will be reviewed by the TSU Engineer.

8.1.18 Lamp columns shall not be used to accommodate signal heads.

8.1.19 All staff employed in the installation, testing and SAT shall be suitably trained and competent and conversant with the requirements of BS 7671 and the Electricity at Work Regulations 1989. All such staff shall carry the appropriate valid Sector 8 scheme card that is pertinent to the work they are carrying out.

8.1.20 Traffic signal equipment shall comply with:

- The current TOPAS specifications relating to traffic signals and associated equipment
- The current TOPAS standards relating to traffic signals and associated equipment
- The current DfT advice notes relating to traffic signals and associated equipment

8.2 The Controller

8.2.1 Traffic signal controllers shall operate in accordance with the Department for Transport (DfT) Specification, currently Topas 2500A, and be Type Approved for the purpose which they are being used for. Controller works specification and configuration forms shall be issued at the appropriate approval stage – as detailed in Table 4.1

8.2.2 Traffic signal controllers shall be configured in accordance with the MCH1827B specification.

8.2.3 For fundamental design purposes the required MCH1827B controller work specification format shall follow the preferred stage sequence order below:-

1. Main road (Traffic)
2. Pedestrian across the main road traffic flow, as sequenced in 1, 2 and 3.
3. Pedestrian across the side road traffic flow, as sequenced in 1, 2 and 3.
4. Major movement (both directions) 1st then 2nd etc.
5. Right Turn Indicative Green Arrow (RTIGA) and or Filter.
6. Side road(s) (Traffic), as sequenced in 1, 2 and 3.

The stage order for parallel stage streams will follow in the same logical style i.e. Traffic, Indicative, Filter, Pedestrian. Cycle phases shall be treated as minor traffic phases for phase order purposes except when they are part of or included in any 'Toucan', 'Puffin' or ‘Pegasus’ control, when they shall be placed as a pedestrian phase as set out above.

Each controller shall be supplied complete with:-

8.2.4 Controller main access door(s) shall be fitted with door stays and straps, to secure the door(s) at 90º or greater to the closed position. Hinged swing frames or similar arrangements providing additional internal access shall be fitted with robust stays to hold them at their maximum opening. They shall have a monitorable door switch.

8.2.5 In addition to the lockable mains isolator switch fitted in the controller as standard there shall be one in the supply housing to the specification as set out in section 0.

8.2.6 A 13A maintenance twin socket shall be provided as a minimum on all controllers. All ancillary equipment shall be wired into its own MCB (Miniature Circuit Breaker) on the power distribution rail and shall not be connected into the maintenance sockets.

8.2.7 The controller works specification and build sheets shall be provided as a single sided printed document with a matching version as a computer file in an electronic format acceptable to the TCU.

8.2.8 A single sided printed document (one page to one sheet) shall be provided matching the electronic configuration/EPROM.

8.2.9 The controller cabinets shall be fitted with a type RKA27C main door lock and top and bottom compression bolts. The manual panel shall use a Yale type 900 lock.

8.2.10 Two sets of keys for each controller lock type shall be provided at SAT.

8.2.11 Manuals shall be provided for equipment purchased unless otherwise directed by the TCU. The manuals shall be in an electronic format acceptable to the TCU or in hardcopy format only when authorised by the Engineer.

8.2.12 Every installation must have the equipment to enable the capability of being remotely monitored and must be compatible with the TCU monitoring systems.

8.2.13 Documentation to include, maintenance logbook, factory build specification, controller test schedule, hard and electronic copies of the controller configuration (in IC4 format if applicable), as built drawing in ACAD format, MOVA dataset (if applicable), LINSIG file and green/green conflict test certificate.

8.2.14 All cables, connectors, fuses, transformers, relays and ancillary equipment required to comply with the specification and drawings,

8.2.15 Additional internal racking to accommodate all detector packs and monitoring/control units.

8.2.16 All detection equipment is required to operate as per the controller specification.

8.2.17 Solar Switch and associated dimming circuits.

8.2.18 The controller must contain the appropriate equipment and licences for the approved methods of control.

8.2.19 Where controller(s) are supplied with external linking to a compatible controller, sign or similar equipment they shall be provided with an appropriate interface.

8.2.20 The controller(s) shall be configured so that the street visible start-up sequence operates from the lamps on/off switch or the controller on/off switch.

8.2.21 A detector channel or input identification shall be provided within the controller by the Contractor. Any markings shall be permanent and indelible.

8.2.22 Only electronic configurations/EPROM's produced through a certified QMS (Quality Management System) are acceptable for site use.

8.3 Controller and MEC Cabinets

8.3.1 All controllers and MEC cabinets shall be coated with a black coloured anti flyposting and graffiti system. The coating shall be in a smooth finish. The coarse finish will not be acceptable in urban areas and/or where pedestrians are present.

8.3.2 All controllers MEC and UPS cabinets shall be sealed on completion of the cable installation by use of a controller mounting base with grommet tray as shown on drawing SCC-TS-SD005. The repair of any damage caused to the equipment through water ingress or vermin infestation shall be the responsibility of the Promoter/Principal Contractor. Base sealing is only acceptable at existing locations that do not currently have a mounting base and grommet tray.

8.3.3 Wherever possible the controller shall be sited to allow the installation and future maintenance to be undertaken, without being hindered by or causing hindrance to vehicular and pedestrian traffic. Generally all traffic movements should be visible when standing at the controller.

8.3.4 It is the Principal Contractors responsibility to liaise with the Specialist Traffic Signal Installation Sub-Contractor, to ensure that any cabinet root is delivered to site at the correct time.

8.3.5 Where the controller is located remotely from the maintenance bay, if required a link path constructed of a bound materials shall be provided.

8.3.6 Depending on the location of the controller and the 85%ile of the passing traffic, the Highway Authority may require safety barriers to be provided to protect installation/maintenance personnel and the signal controller.

8.4 Control of Dimming Voltages

8.4.1 The PE Cell shall be fitted on the signal head nearest to the controller. If this choice is inhibited by the close proximity of any street lighting illumination or over hanging foliage, the PE Cell shall be positioned at the nearest practical location.

8.4.2 The PE Cell shall be rated at 55/70 Lux.

8.4.3 The work specification form defines the setting for the dimming voltage at the controller. Diming Voltages 160V ac for LV controllers. 27.5 volts for ELV controllers.

8.5 Cabling and Electrical Requirements

8.5.1 In addition to Section 314-01-02 of BS 7671:2001 the Specialist Traffic Signal Installation Sub-Contractor shall, before cabling of the site commences, ensure that each traffic phase has at least two aspects fed from different cables and not cabled in a ‘daisy chain’ fashion. Where two primary aspects only exist for a phase then each aspect shall be cabled separately. This is to ensure that in the

event of a pole/aspect replacement that each phase can be left running and thus the whole site can remain on whilst works are in progress. This may result in a larger amount of cabling terminating at the controller or Miscellaneous Equipment Cabinet (MEC). Therefore allowance for additional termination or castellation bars must be made prior to shipping the cabinets.

8.5.2 The completed installations shall be tested electrically in accordance with the current regulations and a completion certificate shall be issued to the Traffic Control Engineer before the commencement of SAT.

8.5.3 Where an MEC is specified it shall incorporate a separately isolated 2 gang RCD protected auxiliary power supply and an RKA27C door lock shall be provided. Cables from the traffic signal equipment and detection shall be connected to the cabinet using traffic signal cable. Transformers for the nearsided puffin/toucan heads may also be housed in this cabinet.

8.6 Signal Cable

Traffic signal cable shall comply with the current issue of BS6346, be steel wire armoured with copper multi-core conductors to BS 7671 current edition, and coloured orange.

8.6.1 The signal cable shall comply with the following specification PVC/PVC/SWA/PVC to the current issue of BS 6346, sheathed coloured orange, embossed Traffic Signals in 4 mm height letters per 11/2 of the said specification, with a conductor cross sectional area as required by the cable design and dependant on the load to be applied but will be in the range 1mm2-1.5mm2. The core insulators shall be coloured and not numbered. All heads to have a cable direct to the controller.

8.6.2 The cabling for the installation(s) shall be designed and include an assessment of the applied loading. The design shall be authorised by the Engineer prior to implementation on site.

8.6.3 In the case of mast arm assemblies, where the transformers are placed in the base of the stanchion, the signal cable conductor size shall be of a sufficient dimension or number to avoid any appreciable voltage drop to the suspended aspects. The spare core requirements of section 8.6.4 may be deemed as satisfied at the transformer location unless stated otherwise by the Engineer.

8.6.4 Signal cables of 8, 12, 16 or 20 core shall be used throughout, with a minimum of 25% or 4 (four) spare cores (whichever is the greater) between poles and the controller with the exception of the connection to stub poles which will have ELV NPI’s or PDU’s.

8.6.5 ELV cables shall be separated at the pole cap and shall use separate termination blocks, these shall be on opposing faces of the mounting plate.

8.6.6 ELV cables shall not be subjected to any joint(s) on new works. Where this is unavoidable, e.g. following a road traffic collision (RTC), the Engineer shall be advised so that further remedial action can be taken, normal practice shall be to provide a completely new cable.

8.7 Cable Forming

8.7.1 Cable and wiring forming out shall be to a uniform and neat manner.

8.7.2 ELV cables shall enter the controller base, pole top or pole termination in different positions and shall be secured to the castellation bars or mounting rails.

8.7.3 The armouring shall be terminated and earthed with a brass gland and the exposed armouring sheathed in exposed and damp areas such as pole tops. A CET Gland may be used when terminating in the controller cabinet or other damp proof environment.

8.7.4 The inner PVC sheath of the armoured cable shall be stripped back approximately 25 to 30mm above the gland which is terminated on the castellation bars or mounting rails in the control cabinet or pole top.

8.7.5 Cables shall not be bent to an internal radius of less than 12 times the external diameter of the cable or less than the radius recommended by the cable manufacturer, whichever is the greater.

8.7.6 The cores from each cable shall be formed and tied separately from other cables, using ties at intervals of approximately 100mm. This interval may be less to provide a neat finish.

8.7.7 Each termination shall be looped in order to provide approximately 150 mm of spare core and provide a drip loop.

8.7.8 Cable cores that have been terminated shall be tied together in a neat manner.

8.7.9 Spare cores shall be cut to a minimum length, with the shortest being long enough to reach the furthest termination point plus 150 mm and the remaining spare cores cut, so that the ends are of equal length.

8.7.10 Spare cores at the pole tops, controller and all other locations shall be terminated and bonded to earth. The spare cores shall be grouped and tied together and labelled 'SPARE'.

8.7.11 The Engineer's authorisation shall be sought if cable cores within the controller require extending and shall be by the use of in-line crimps. The same colour cable core shall be used to extend the cable. Bunching of the crimps shall be avoided by 'staggering' the position of the crimps.

8.8 Loop Cable

8.8.1 Loop cable shall comply with BS 6195 Type 4 category 'C' 1.5 mm² (30/0.25) single core EPR/PCP (Ethyl Propylene Rubber / Polychloroprene) sheath coloured black as set out in TR2029.

8.8.2 Loops and their tails shall be installed as set out in section 8.19

8.8.3 Joints between loop cable and feeder cable shall be as set out in section 8.9

8.9 Feeder Cable

8.9.1 Loop feeder cable with an orange coloured sheath, shall comply with TR2031Single pair cable (2 core) right hand lay 5 turns/m and Type S2, 2 pair cable (4 core), right hand lay 7 turns/m.

8.9.2 Approximately 1m of spare loop cable and 1m of spare feeder cable shall be left in the chamber at the joint between the two cables.

8.9.3 Loop to feeder cable joints shall be enclosed in a re-enterable joint enclosure to BS EN 60529 with an IP68 Cat 1 rating. The enclosure should be sufficiently transparent to view the condition of the terminal block providing the loop to feeder connection.

8.9.4 Other types of jointing kits shall only be used with the authorisation of the Engineer and may be either chemical 'resin' or heat shrink and used in accordance with the manufacturer's instructions. Joint connections shall be of the 'crimp' type. Such crimped connections shall be subjected to a 'pull test' of 3Kg. The loops tails and feeder cable shall be cut so as to cause a stagger of the connections.

8.9.5 A feeder cable shall only be jointed where a loop tail is to be connected. This shall only be in the chambers provided. No other jointing is acceptable unless used as a temporary arrangement prior to the replacement of the damaged length of feeder cable.

8.9.6 Loop feeder cables shall not be terminated directly onto the detector backplanes.

8.9.7 Loop feeder cables on entering the controller shall be bunched and tied to the castellation bars, or mounting rails, and labelled as detailed in section 8.10.5

8.9.8 As with the armoured cable cores the loop feeder cable shall be routed parallel with the distribution panel and formed in a neat manner.

8.9.9 The loop feeder cable shall be tied at 100 mm intervals or less to ensure a neat finish and branched out to an individual termination point.

8.9.10 The Contractor shall terminate the loop feeder cables onto spare or previously identified termination blocks generally at the same height as the other terminal blocks. If there are insufficient spare terminal blocks then the Contractor shall supply and fix additional terminal blocks in same manner as the equipment manufacturer and ensure they are not in close proximity to the LV terminations.

8.9.11 When it is necessary to connect the loop feeders in series, a spare termination on the block in use shall be used for this purpose.

8.9.12 Connections from the termination blocks to the detector backplanes shall be made with 24/0.2 PVC insulated cable, twisted in pairs for each loop, with a minimum of 10 turns/m.

8.10 Cable Identification

8.10.1 All cables entering any equipment housing shall be identified using a pull tight tag fixed around the inner sheath immediately above the SWA termination.

8.10.2 The tag shall be marked using an approved waterproof, indelible, black marker pen, in the following manner:-

8.10.3 ELV Cables (PDU's, etc)

The tag shall be yellow and marked with all the signal poles in the cable run and in addition the letters ELV added.

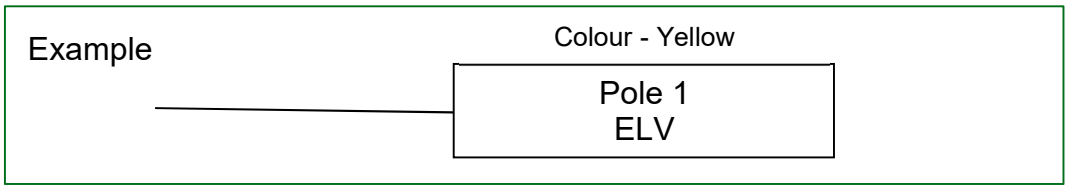

8.10.4 ELV Cables (Linking)

The tag shall be yellow and marked with the site reference number of the linked equipment and in addition the letters ELV added

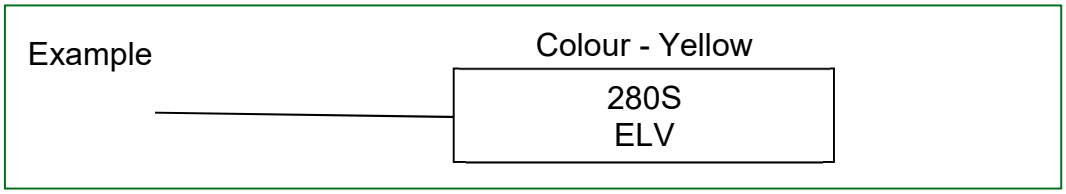

8.10.5 Loop Feeder Cables

The identification of these cables is shown below and shall follow the detector and road names given in the scheme drawing and specification sheets supplied. One side of the yellow tag shall be marked with the detector and arm designation and the other side marked with the Street or Road name, as approved with the TCU. Where multi-pair feeders are used then each twisted pair of cores shall be labelled.

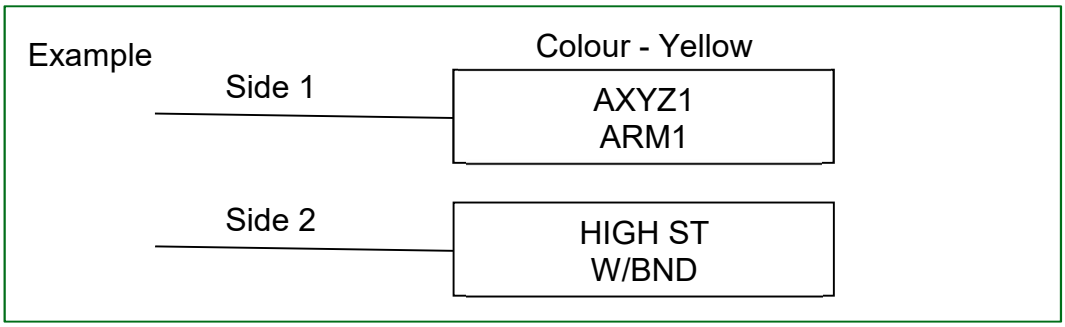

8.11 Remote Monitoring Equipment

8.11.1 The Highway Authority currently operates a Siemens Remote Monitoring System (RMS) and a Siemens UTC system that uses UTMC OTU's. Due to the complexity of communications available in any specific area and specific facilities required (CCTV, Scoot, Mova, RMS) at the installation we recommend contacting TCU at the feasibility stage for guidance.

8.11.2 All monitoring and communications systems at installations must have the latest hardware, software and firmware to communicate with existing SCC systems. All hardware must be appropriate for the on street environment in which it is to be used (e.g. rugged, elevated temperatures, IP rated weatherproofing).

8.11.3 All monitoring and communications systems shall be fitted and fully functional, 15 working days prior to conducting the Site Acceptance Test (SAT).

8.11.4 It shall be the promoter's responsibility to install the approved communication systems, which must be brought into commission prior to the SAT of the signal installation, and must be terminated inside the approved street cabinet.

8.11.5 All relevant communication and configuration details need to be supplied to the TCU at least 15 working days prior to the planned SAT. This should include but not be limited to

- Telephone number
- Circuit number
- IP addresses
- Usernames and password
- ISP provider and contact details

- Make, model, firmware version and electronic user manuals for communications devices (e.g. routers & switches)
- Network diagram

8.11.6 It shall be the promoter's responsibility to arrange for the addition or amendment of the remote monitoring systems configuration. This service can be provided by the TCU for an agreed fee.

8.11.7 Alternative monitoring systems to existing ones currently in use will be considered. Contact the TCU to discuss proposals at the earliest opportunity.

8.12 Traffic Signal Poles

8.12.1 All standard traffic signal poles shall be 114.3mm diameter in 3.5mm+ 0.5mm thick grade 50C structural steel to BS EN 10219 S275, hollow section, hot dipped galvanised to BS EN 1461 and plastic coated black in colour to the current issue of BS EN 12368. Other pole materials and colours shall not be used unless with the prior written consent of the TCU. Traffic signal poles are not to be predrilled for push button, PDU or NPI units and are not to have a cable entry slot near the base. They are to be predrilled at the top for mounting head brackets at each quadrant. No damage to the external finish is acceptable.

8.12.2 The standard signal pole whether straight or swan necked shall be 4.22m long. This is to satisfy a 0.6m buried depth in the PRS and a 2.1m clearance to the underside of the crank of the pole. The cable access will be through the PRS into the base of the pole. Energy absorbing non frangible passively safe signal poles will be considered and only approved on a site by site basis by the Engineer. Traffic signal poles shall meet the vehicle impact testing requirements of BS EN12767.

8.12.3 Full height poles shall be supplied with their correct size pole caps in the same colour as the pole.

8.12.4 Straight poles are the same height as the swan necked poles for aesthetic reasons, when closely associated at places like pedestrian crossings a difference in height of the signal heads will look odd.

8.12.5 Short 2m stub poles used for push button units are to have a welded top cap as part of the manufacture, there will be no pre-drilling and will have a 0.6m buried depth in the PRS.

8.12.6 Swan necked poles are to have a 450mm offset and be of a smooth construction with no welding at the crank, they shall not be the cut and welded type. Swan necked poles with a 300 or 600mm offset are available but can only be used with prior agreement from the TCU.

8.12.7 Tall poles at 7.2m for a second high level head and hinged tall poles will have welded top caps. Both of these and cantilever masts will require authorisation by

the TCU and shall be supplied with a specific design for the pole and foundations relating to the proposed location and equipment to be used on the column.

8.12.8 A hard standing or paved area shall be provided surrounding all traffic signals poles and be a minimum distance of 2m from the pole in all directions.

8.12.9 The TCU discourages the use of extension brackets, however they may be used with approval of the TCU and are available in standard lengths of 300, 450, 600 and 900 mm No brackets will be accepted if they have been altered or are damaged in any way. The length required shall be approved by the TCU.

8.12.10 The contractor shall ensure that all the traffic signal poles are supplied in perfect condition with no damage, including the external finish. Any damaged poles shall be returned to the supplier for replacement. At the time of SAT the TCU will inspect the poles and will require any damaged poles to be replaced at our discretion. The total cost of any such measures shall be borne by the Promoter and/or Principal Contractor, including all civil works and signal equipment works to each affected pole.

8.12.11 The cutting and or shortening of poles is strictly prohibited. If non-standard length poles are required due to site conditions, then factory fabricated poles only will be accepted with the on site approval of the TCU prior to installation.

8.12.12 The traffic signal poles are shown in drawing no SCC-TS-SD0013.

8.13 Signal Heads

8.13.1 Traffic signal heads shall comply with TR 2206 (EN12368), and be Type Approved.

8.13.2 A minimum clearance of 2.4m to the bottom of the signal heads shall be maintained where the signal heads are on a cycle route, otherwise a minimum clearance of 2.1m shall be maintained.

8.13.3 All traffic signal heads shall be supplied complete with lamps, optical systems and appropriate galvanised mounting brackets.

8.13.4 Signal head covers will be orange in colour, opaque and will be attached to each head as it is installed on site. Covers will remain in place until the TCU attend the SAT

8.13.5 All vehicular signal heads shall be fitted with backing boards, edged with 50mm wide white diamond grade retro-reflective material.

8.13.6 In Somerset we always side mount the offside primary signal at Mid-block crossings within the ‘crank’ of swan neck poles.

8.14 Signal Heads (Variants)

8.14.1 The standard signal head variations are set out in TR 2206 Appendix 1.

8.14.2 The four aspect signal head arrangements shall be supplied with the green arrow offset in the direction of the arrow unless otherwise defined and stated as '4-in-line'.

8.14.3 Regulatory box signs shall be supplied offset as appropriate to the movement ban or indicated direction unless otherwise defined and stated as '4-in-line' or offset as individually specified.

8.14.4 "No U-Turn" signs shall be supplied offset right unless otherwise defined and stated as '4-in-line' or offset left.

8.14.5 Regulatory box signs shall be supplied without visor or hood.

8.14.6 Primary visors or hoods shall be provided on close associated secondary signal heads at junctions and the traffic heads of mid-block crossings. The scheme drawing will identify this requirement.

8.14.7 If fewer than ten of the type and make of the signal head proposed are already commissioned within Somerset , then an additional head with aspects detailed by the TCU of exactly the same specification shall be provided (at no cost to the Highway Authority) for the exclusive use of the Highway Authority. A list of types and makes of signal head of which there are currently more than ten is available from the TCU.

8.15 Pushbutton Units

8.15.1 All pushbutton units and green/red figure LED displays are to be extra low voltage (50 Volts maximum).

8.15.2 All lamps are to be fully monitorable.

8.15.3 All pushbutton units are to be fitted with approved fully monitored extra low voltage tactile devices.

8.15.4 The use of combined pushbutton display units and high level repeaters is acceptable within Somerset.

8.15.5 All pushbutton units are to be fitted with tactile devices and where appropriate and with the agreement of the TCU, audible device. The TCU will assist with this choice.

8.15.6 All tactile devices are to be fully monitorable.

8.15.7 If fewer than ten of the type and make of pushbutton proposed are already commissioned within Somerset County, then an additional unit of exactly the

same specification shall be provided (at no cost to the Authority) for the exclusive use of the Authority. A list of types and makes of unit of which there are currently more than ten is available from the TCU.

8.16 Use of Audible Indicators at Pedestrian Crossings

8.16.1 Audible indication will be used during but not necessarily for the whole of the indicated 'green man' phase.

8.16.2 In some situations adjacent to residential properties the audible indication will be silenced during the night. The times when audible signals will not usually be used are between 23:00 hrs to 07:00 hrs, seven days a week.

8.16.3 Where independently operating pedestrian crossings are in close proximity to each other audible indication will not be used. A distance of 50m should be used as a guide; however this is at the discretion of the Engineer as propagation of sound depends upon the local environment.

8.16.4 Audible indication at junctions with an all-round pedestrian stage is not used as a standard, although the use of tactile indicators is used throughout.

8.17 Pole Mounted Detectors

8.17.1 All new pedestrian crossing facilities at mid-block crossings and included in junctions shall incorporate near side pedestrian technology. These crossings are to be capable of demand dependant extensions facilitated through the use of On-crossing detection. The requirement of unlatching demands facilitated through the use of kerb-side detectors is not always a requirement and clarification from the TCU is essential.

8.17.2 On-crossing detection shall be accomplished using signal pole mounted, microwave detectors as specified in TR 2506. The make and model shall be approved by the TCU.

8.17.3 Sufficient on-crossing detectors must be provided to ensure full coverage of the proposed crossing length between the road studs.

8.17.4 If Kerb-side detection is required it shall be accomplished using signal pole mounted, detectors as specified in TR 2507. The make and model shall be approved by the TCU.

8.17.5 If kerb-side detectors are used, they must provide full coverage of the proposed crossing width.

8.17.6 All brackets and fixings must be approved by the TCU prior to installation on site.

8.17.7 Where loops are not required by the TCU, approaching vehicle detection at mid-block crossings shall be accomplished using signal pole mounted microwave

vehicle detectors as specified in TR 2505. The make and model shall be approved by the TCU.

8.17.8 If fewer than ten of the type and make of detector proposed are already commissioned within Somerset County, then an additional detector of exactly the same specification shall be provided (at no cost to the Authority) for the exclusive use of the Authority. A list of types and makes of detector of which there are currently more than ten is available from the TCU.

8.18 Detection Equipment

8.18.1 Installations shall use approved autotune four-channel loop detector units or above ground detectors using microwave, Infra-red, visible spectrum technology or similar detector device as approved by the TCU.

8.18.2 Surplus channels from loop detector units shall be left as spares for future use. Total requirements shall not be made up with two-channel units.

8.18.3 Four-channel detector units shall be housed in the controller, subject to a maximum feeder length of 250m. When feeder cables lengths exceed 250m a remote MEC and feeder pillar with power supply shall be provided to house detection equipment, unless otherwise specified by the TCU.

8.18.4 Four-channel detector units shall be mounted in 19 inch rack(s) with single backplanes and guides pitched at approximately 25mm, unless otherwise approved by the TCU. All detector units shall be collated into the rack(s), assembled and connected into the controller, with wiring looms and termination blocks provided where necessary.

8.18.5 Care shall be taken to connect the loops in the order the specification states, from the top of the card down and from left card in the rack to the right. It is essential to ensure that closely associated loops such as unidirectional or speed loops and loops next to each other in adjacent lanes are on the same card so as to reduce the incidence of cross-talk between detector channels.

8.18.6 Connections from the termination blocks to the detector backplanes shall be made with 24/0.2 PVC insulated cable, twisted in pairs for each loop, with no less than 10 turns/m. The 24/0.2 PVC insulated cable shall be colour coded as follows

Channel 1	Blue
Channel 2	Violet
Channel 3	Black
Channel 4	Brown

The colours shall be repeated for each separate detector card.

8.18.7 Where practicable each loop shall have its own 2 pair feeder cable back to the controller (or MEC where appropriate)

8.18.8 Where unidirectional logic is not provided in the controller then logic equipment shall be mounted in similar fashion with standard logic backplanes pitched similarly to the detector units and incorporated in the same 19 inch rack(s).

8.18.9 All detector channels will be labelled in accordance with section 8.2.21

8.18.10 Magnetometers shall only be used as a last resort following discussions with the TCU. In the event agreement is reached for their use the TCU the units shall not be core drilled into the highway surface. It will be a requirement that they are housed within composite chambers.

8.19 Loop Configurations

8.19.1 The configurations shown in drawing number SCC-TS-SD0002 Appendix 3 shall be used throughout all works unless otherwise specified by the TCU.

8.19.2 Any loop configuration, cut into the carriageway, must be a minimum of 0.5m from any existing ironworks (covers, frames, drain gullies, etc.) in any direction. If the loop configuration shown on the scheme drawing does not meet this tolerance, the TCU shall be consulted prior to installation.

8.20 Loop Details

8.20.1 Loop cable shall be as specified in section 8.8 and shall be installed to MCH1540 unless otherwise instructed differently in the following paragraphs.

8.20.2 All loops and loop-tails less than 20m in length shall be in 10mm wide slots. There shall be a minimum of 65 mm cover between the uppermost loop cable and the carriageway surface and a minimum 90mm depth of slot for a 3 turn loop, extra loop turns will require deeper slots to comply with the cover requirement. The contractor shall maintain the cover over the full length of the slot including the corners and the cross cutting.

8.20.3 The slot shall be thoroughly dried prior to filling with the loop cable and bitumen. Loop cable shall be tamped down into the slot with a blunt instrument so as not to damage the cable, but to ensure it is jammed in place at the base of slot so as to stop lifting of the cable when the bitumen is poured in. The slot shall be filled to carriageway level with blown grade hot poured oxidised bitumen complying with the current specification (R95/25 preferred or R85/25 is an acceptable alternative). The Contractor shall ensure that no voids are left within the bitumen.

8.20.4 If on inspection the loops are cut less than the specified depth or the loop cable has floated up in the bitumen thus reducing the minimum cover to the loop cable then the contractor shall replace all loops on the site at no cost to SCC.

8.20.5 Where the loop cable turns in the slot at an angle of less than 110º, the internal apex of the corner shall be removed by the use of a bolster or by cross-cutting the corner as shown in the sketches below. The formation of a pillar of original surfacing material by cross cutting too far away from the corner will not be accepted and will require re-cutting by the slot cutting contractor at no cost to SCC.

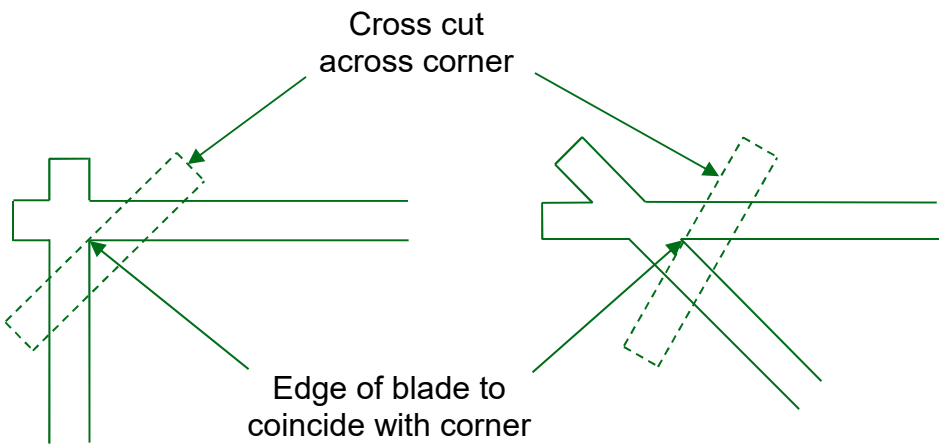

8.20.6 The loop shall be tested in the slot before back filling, as defined in MCH1540.

8.20.7 Surplus bitumen over spilled from the slot shall be removed immediately following its application, clean to the carriageway surface but taking care not to produce a trough. A trough will form if the excess bitumen is removed before it has cooled sufficiently.

8.20.8 Where it is necessary to cut into the concrete base of the carriageway then the overall depth of cover to the top most loop cable may be less than the specified 65 mm provided that the depth of cover within the concrete base is not less than 25 mm. In the carriageway where the wearing surface is concrete, the slot shall be of a depth to maintain a cover to the top most loop cable of not less than 25mm throughout the entire length.

8.20.9 Slot cutting shall not be carried out when the ambient air temperature is 2ºC, or lower, and falling.

8.20.10 Loop tails or feeders shall be returned to and incorporated into a carriageway CLB as soon as practical keeping 'in slot' carriageway loop tails or feeders to a maximum of 5m. Once inside ducting the tails shall be twisted as set out in section 8.20.13

8.20.11 Loop tails in excess of 5m of slot, including crown cutting, shall only be permitted with written approval from the TCU. Under these exceptional circumstances the

loop tails will need to be twisted with more than 10 turns/m for each individual loop pair along their full length between loop and feeder joint. This will ensure the change in inductance at the loop is not degraded by stray inductance effects in the tails. Slots for tails which are to be twisted will require a 16mm wide slot to be cut.

8.20.12 The slot for the loop tails shall be cut towards and into the CLB using a diamond tipped circular saw, having first removed the CLB cover and if required the cap or bung installed during construction. There shall be a maximum number of two loop tail pairs cut into the loop box with one pair on each side of the box.

8.20.13 The loop tails shall be connected to the loop feeder cables, having been twisted more than 10 turns/m for each individual pair along their full length, between the loop and feeder joint both within the loop tail slot and duct in order to reduce the potential for crosstalk between loops. If loop tails are to be left un-terminated they shall be sealed to prevent the ingress of water.

8.20.14 The slots cut in the CLB shall be of sufficient size to accommodate the tails from separate loops. A pre-treated cotton rag (treated with a suitable agent so as to repel the bitumen) shall be inserted into the end of the duct to hold the cables secure and prevent the ingress of foreign matter. Bitumen shall be poured on top of this rag to the top of the duct, totally encasing the loop cables to ensure a watertight seal into the duct. Blanking plates shall be placed over the inside faces of the slots in the box and the normal backfilling of the loop slots completed up to the box. The blanking plates shall be removed after the bitumen has solidified and the CLB cover refitted.

8.20.15 The base of the CLB shall not be filled with bitumen to seal the duct.

8.20.16 Should loop re-cutting be necessary the CLB shall be re-opened, the bitumen in the top of the duct broken out, the cotton rag removed and the above operation repeated without any disturbance to carriageway or footway finishes and needing no external assistance.

8.20.17 The system 'D' loop configurations are shown in drawing number SCC-TS-SD0002 They are chevrons set at 45º throughout. The maximum length of a loop in any lane is 3.0m before producing a double chevron. The minimum length of cable per loop shall be 24m, for example, an 8m slot shall have three turns of loop cable. There shall be a maximum number of six loops per channel of detection.

8.20.18 Call/Cancel or queue detection loops shall always be cut under the TCU's direct instruction. Where high sensitivity for cyclists is required the loop should be in accordance with detail A in drawing no SCC-TS-SD002. The cable windings shall be set out to obtain the maximum sensitivity.

8.20.19 All loops will be set out and dimensioned FSL (From the Stop-Line). If any loop cannot be set within these tolerances then the TCU shall be consulted.

8.20.20 The linear dimension will have the following tolerances: - 0m to 18.0m at 0 to 0.25m over 18.0m at 0 to 0.50m.

8.20.21 The maximum length along the carriageway (in the direction of travel of the vehicles) covered by a single loop shall be 3.0m.

8.21 UTC Control Equipment

8.21.1 The Highway Authority operates a Siemens, SCOOT Controlled, UTC system. All new installations that are required to be under UTC control shall be fitted with compatible UTMC Outstation Transmission Unit (OTU).

8.21.2 Changes to the In-station hardware, software, or database, necessitated by the new installation, shall only be undertaken by the Highway Authority or its agents. All reasonable costs for this shall be borne by the Promoter.

8.21.3 The OTU communications are IP based and as such require the provision of a suitable communications link. Where possible this will be via existing or new private communications links. If this is impractical then a suitable ADSL connection will be used. For clarification contact TCU 0300 123 2224

8.21.4 The provision of suitable communications will need to be approved with the TCU at feasibility stage however the cost of its installation and on-going charges shall be borne by the scheme promoter until the installation is fully adopted by the highway authority.

8.21.5 Due to advances in technology other types of circuit or methods of communication may be appropriate. The TCU must be consulted at feasibility stage on its requirements.

8.21.6 When designing and writing configurations the standard SCC UTC control and reply words should be used where possible. Please contact TCU for further advice.

8.22 Selective Vehicle Detection (SVD) Systems RTEM

8.22.1 New specification expected in 2017/18 please contact the TCU for up to date requirements.

8.23 MOVA Control Equipment

8.23.1 Where MOVA control is required the latest version of MOVA unit shall be fitted with relevant licence. The TCU should be consulted on the MOVA unit required.

8.23.2 The 'fall back' mode for MOVA control shall normally be Vehicle Actuation (VA), unless otherwise directed by the TCU. It shall be permissible for VA mode to operate using the MOVA detection equipment with additional detection as required.

8.23.3 The MOVA unit will need to communicate with the existing MOVA instation in the Highway Authority's Traffic Control Room located in County Hall, Taunton.

8.24 CCTV Equipment for Traffic Signal Sites

8.25 CCTV General Requirements

8.25.1 CCTV units can be digital or analogue. If analogue the image will need to be digitised through the use of a built in or separate encoder.

8.25.2 SCC has specific separate analogue to digital encoders that are compatible with its current instation CCTV system. Encoders other than those approved will require testing for compatibility, the cost of this testing will be borne by the promoter (currently around £4000 per unit). Please contact the TCU for advice before specifying an encoder.

8.25.3 All cameras should be colour of the Pan, Tilt, Zoom variety (PTZ) with High Dynamic Range for night time / reduced light capability. This can be provided through Infra-Red Illumination or through the camera logic.

8.26 CCTV Types

SCC use 2 types of CCTV units, Box cameras and Dome cameras.

8.26.1 Box type cameras:

On large installations with tall poles we will require a "shoe box" type camera where the camera unit is mounted in an environmental case with some form of heater and wiper. These are normally mounted on very tall poles or lighting columns and will have an associated mounting assembly, winch mechanism and counterbalance weights. These units will require some form of stabiliser to prevent image shake. This can be built into the camera or it can be a separate unit. Any separate unit should stabilise the image before it is transmitted and will need to be mounted in the CCTV on-street cabinet.

Example Shoe Box Cameras:

- Pelco Espirit Enhanced
- Bosch Dinon Bullet

- Sony SNC W or V Series

8.26.2 Dome Cameras:

Smaller installations can use "dome" type cameras that are mounted to a bracket on a signal pole that can be between 4 and 6 metres high. The dome covering the camera unit and any mountings should be suitable for the environment in which it is operating (Rust protected mountings & IP rated IP66 or 67 dome).

Example Dome Cameras:
- Pelco IV IP (Digital)
- Pelco IV SE (Analogue)

8.27 Camera Specification

Pan Tilt Zoom:

8.27.1 The Pan should ideally (if available) be 360+ degrees (goes all the way round). If this is not available the non-view area should be located in an unimportant or insignificant zone. Where a large non-viewable area is present an additional camera may be required.

8.27.2 The Tilt angle should be calculated to ensure that any carriageway below the mounting pole can be seen.

8.27.3 The Zoom should be sufficient to see as far as possible on each approach.

8.27.4 The zoom can be digital or optic

Camera:

8.27.5 Configurable IP address, subnet and gateway (Digital camera or encoder)

8.27.6 Minimum 1/3" CCD

8.27.7 Day (colour) and night (monochrome) vision with auto sense

8.27.8 Auto & manual iris control, (focus & iris opening)

8.27.9 Transmission frame rate adjustable between 5 and 30 (or more) frames per second

8.27.10 Units to use MPEG4 or H264 compression

8.27.11 PAL or NTSC configuration

8.27.12 ONVIF compatible

8.27.13 Minimum of 5 preset positions

8.27.14 Ability to blank out "no view" areas (Privacy Masks). Can be done physically through installation of blanking plate(s).

8.27.15 Does not have to record

8.27.16 Power Over Ethernet supply is acceptable (subject to distances)

8.27.17 On Street power supply: Maximum 50V AC or DC to maintain the Extra Low Voltage rating

8.27.18 If available, Video Analytics should be included

8.27.19 Wind load calculations will be required

8.28 Transmission

8.28.1 The available bandwidth of the connection should be borne in mind when specifying the camera. Full HD images are great to look at but may produce more data than the data connection can cope with. The connection data limit is controlled by the upload speed, not the download speed.

9 Communication connections

9.1 General

9.1.1 The Promoter/Principal Contractor shall pay all costs associated with the supply of telecommunication facilities for the installation.

9.1.2 The Principal Contractor is responsible for all civils works relating to the installation of the telecommunication facilities.

9.1.3 The Principal Contractor's Specialist Traffic Signal Installation Sub-Contractor shall connect the telecommunication facility to the traffic signals equipment and ensure that the communications are working. This testing will involve the Traffic Control Engineer, so the contractor shall liaise with the TCU giving a minimum of 15 working days' notice of the commissioning date. Communications details listed in 8.11.5 will be required at this point.

9.1.4 The LAN IP address for Signals equipment will be provided on request by the TCU.

9.1.5 TCU will provide advice on this process if required.

9.2 BT Lines/Circuits at Existing Installations

9.2.1 For all existing traffic Signal sites please contact TCU for clarification.

9.3 Private Communication Circuits

9.3.1 Somerset County Council owns private communication networks within Somerset.

9.3.2 Where feasible, SCC may require the Promoter to connect the installation to the existing private communications network, via a new additional extension. The Promoter will be responsible for all associated costs.

9.3.3 SCC's Specialist Traffic Control Systems Sub-Contractor will carry out all connections between the Traffic Signal equipment and the private communications network. Please contact TCU to arrange for these works to take place.

9.3.4 The Principal Contractor is responsible for any civils works relating to the connection to SCC's communications network.

9.3.5 The LAN IP address for Signals equipment will be provided on request by the TCU.

9.4 Router Specification

9.4.1 Due to the large number of different routers available the requirements have been generalised. The TCU accept that finding a suitable router is not easy, if a certain requirement cannot be met please contact the TCU for advice.

9.4.2 Must be ruggedized for elevated temperatures (up to 70 degrees Centigrade) and on-street conditions

9.4.3 Capable of establishing IPSEC Virtual Private Networks with the TCU instation

9.4.4 Suitable for expected transmission bandwidth (3G/4G, ADSL or VDSL)

9.4.5 Configurable inbuilt Firewall

9.4.6 Configurable Local Area Network(s) (IP, Subnet, Gateway)

9.4.7 Configurable External IP address (fixed)

9.4.8 Remote management via a Web based interface

9.4.9 Configurable Network Address Translation (NAT)

9.4.10 Port control (Port Forwarding & Blocking)

9.4.11 Auto Time sync capability

9.4.12 SNMP V2 compatible

9.4.13 User log (record of changes and by who)

9.4.14 Remote backup and restore capability

9.4.15 *In built diagnostic tools (i.e. Ping, Trace, Wireshark)

9.4.16 *Minimum 4 configurable RJ45 (Cat 5) connections

9.4.17 *Configurable usernames and passwords with different access levels

9.4.18 *Status display LED's (front panel)

9.4.19 Some of the network will require different types of router or device that suits the transmission medium at the site location. This could be wireless, copper wire or fibre optic connections. The TCU will advise on this if required.

(* = Contact TCU if not available)

10 Civil Works Requirements

10.1 Poles and Pole Retention Sockets

10.1.1 The PRS shall be installed in the footway, verge or traffic island, and is the only acceptable means to support signal poles and to ease the subsequent cabling of the installation.

10.1.2 Traffic signal poles shall be erected in purpose made PRS installed in accordance with the specification, standard details and scheme drawings. The Signal Installation Contractor shall take care to ensure that the pre-drilled holes on the pole are correctly aligned with the final orientation of the signal head/s to be mounted on it bearing in mind minimum clearances required from the live carriageway and tactile paving (if applicable).

10.1.3 The approximate positions of poles and therefore the PRS's are indicated on the drawing but the precise positions shall be determined on site and shall be to the approval of the TCU prior to installation. Where there is any doubt about signal pole/PRS positions or the installation of any access chambers, the TCU shall be called to attend site to agree any changes.

10.1.4 The PRS tops must be constructed from cast steel to GS240 or ductile iron to BS2789 500-7

10.1.5 The PRS must be capable of withstanding high speed vehicle impact forces to steel posts with a wall thickness of 6mm. The PRS must be able to withstand impact without any structural surround to the top 80mm of the unit. A valid impact test must result in a post deflection greater than 30 degrees. All sockets must be impact tested. Test data and independent certification must be available to substantiate claims for sockets and foundations.

10.1.6 Posts must be positively secured into the PRS and be able to withstand a turning moment of 3.4kNm through a load of 230kg @ 1.5metre from the centre of post without any rotation.

10.1.7 Securing mechanism of sockets to post must not damage the coating or galvanised surface of the post.

10.1.8 All fixings which secure posts in place must be housed below ground ensuring no risk of damage, vandalism or theft.

10.1.9 Retention Socket Pedestrian plugs must be tested to EN124 - B125 (12.5 tonne) loading.

10.1.10 Pedestrian plugs must be able to be stored within the Socket to enable rapid deployment in the case of an emergency

10.1.11 The PRS must have the ability to be reduced in depth on site easily. The PRS shall provide for burying all types of signal pole to a depth of between 700mm

and 1000mm, however the system shall be able to modify the bury depth of the pole where underground obstructions restrict the pole positioning at full depth. Any change to the standard burying depth shall be approved by the TCU and supported with a modified base design.

10.1.12 PRS must be supplied with a bottom entry bend that can swivel 360 degrees. The bend must have the ability to utilise the full bore 100 mm diameters for easy cable entry. The bend must be compact, allowing the post to rest no further than 150mm above the foundation base. Ducts must be able to be inserted a min of 75mm into the bend and be mechanically fixed to ensure no displacement occurs during backfill.

10.1.13 All operating components must be serviceable on site without removing the socket.

10.1.14 The Retention Socket must be capable of accommodating graded surfaces in paved area such as those at pedestrian crossing.

10.1.15 PRS supplied must have an associated lifting mechanism which enables Traffic Signal poles to be lifted and lowered in and out of the Retention Socket. This must be operated without the requirement for carriageway closures / TM. The PRS must be capable of allowing signal poles to be removed from the socket without any damage to the pole, attached signal equipment or socket and without the need for civil engineering contractors or tools to be required for such process. Once the pole has been removed the system must then be able to allow the pole to be rested on a support thus allowing full unhindered access to the signal head arrays for the completing of all tasks associated with the heads and/or pole cap assemblies and then able to subsequently re-erect the pole back into the socket again without any damage to the pole, attached signal equipment or socket.

10.1.16 Suppliers of PRS must be able to supply EN40 & BD94/07 foundation design calculations for all sizes and depths of PRS supplied.

10.1.17 In the event of an impact to a Retention Socket that has been installed according to the manufacturer's instructions, the Retention Socket must be warrantied against failure. In such circumstances the manufacturer must be responsible for replacement of the Retention Socket and all associated re-instatement costs.

10.1.18 The manufacturer’s guideline for the correct installation of the PRS has to be fully adhered to. It is recommended in addition to this that a 2m sacrificial stub pole should be used when installing the PRS to check for vertical alignment of the socket. Once this has been checked then the supplied blanking cap shall be secured onto the pole access hole and left until such time as the Signal Installation Company attends site to install the signal poles.

10.2 Electric Supply Housing

10.2.1 Electric supply housing (ESH) shall be located in the vicinity of the controller. For smart metered supplies a hinged door cabinet (i.e. Haldopillar E1/HDP/146) or equivalent should be used.

10.2.2 The cabinets shall be galvanised, factory finished in black and complete with a plinth. The door shall have a tri-lock fitted top and bottom.

10.2.3 For installation details see the standard drawing in drawing numbers SCC-TS-SD015/SD016.

10.3 Communication Circuit

10.3.1 External communications cabinets (if required by the TCU) shall be located adjacent to the controller. The cabinets shall be Haldopillar 210 or equivalent approved. Please liaise at the feasibility stage with the TCU regarding whether a cabinet is required. As shown drawing numbers SCC-TS-SD015.

10.3.2 The cabinets shall be galvanised, finished in black and complete with a plinth. The door shall have a tri-lock fitted top and bottom.

10.3.3 For installation details see the standard drawing numbers SCC-TS-SD015/SD016.

10.3.4 All cabinets shall be base sealed on completion of the cable installation. The repair of any damage caused to the equipment through water ingress or vermin infestation shall be the responsibility of the Promoter/Principal Contractor.

10.4 Ducting System

10.4.1 Ducts shall be made from polyethylene, with a smooth internal and external face and have a wall thickness of no less than 4.75mm. The ducts shall be coloured orange and inscribed with white lettering, 9mm high at 1m centres "TRAFFIC SIGNALS". Corrugated ducting will not be permitted except in exceptional circumstances and only with the prior written consent of the TCU. If corrugated ducting is installed prior to any written approval, the TCU has the right to ask for its complete removal and replacement with the above specified ducting.

10.4.2 A ring duct system shall be deployed around a junction signal installation and shall comprise of a minimum of four 100mm diameter ducts. The location of ducts shall be as shown in the scheme drawings. The number of ducts supplied in each duct run will vary from installation to installation; advice from the TCU should be sought at an early stage.

10.4.3 The duct runs shall be in straight lines between chambers. No preformed bends shall be used, except for 50mm diameter ducts used to connect MDB to CLB. All

ducts shall be butt jointed by means of custom made polyethylene connector sockets and or sleeves.

10.4.4 The ends of all ducts shall be incorporated into carriageway loop boxes (CLB), medium duct box (MDB), large duct box (LDB), Extra large duct box (XLDB), signal pole retention system (PRS) and controller inspection chambers (CIC). The ends of all ducts shall be finished flush with the inside of the chambers and pointed with Class (1) mortar, or where pre-formed chambers have been used the appropriate sized cut-out shall be made and the duct should be a snug fit.

10.4.5 Each duct shall be fitted with a pigmented and stranded polypropylene draw rope of minimum 5KN breaking load and having a design life of not less than 20 years, the ends of which shall be secured to prevent it being pulled back into duct.

10.4.6 The contractor shall ensure that the polypropylene draw ropes used to pull cables through the duct system remain intact throughout the duct network on completion of the cable installation. They shall be flushed clear, using compressed air, prior to the installation of traffic signal cables.

10.4.7 The spacing of chambers along duct runs shall normally be 30m maximum, but never exceed 50m.

10.4.8 All 100mm ducting shall be tested, by the Principal Contractor passing a 90mm mandrel through the whole length of the completed ducting. For details see Highway Construction Detail (HCD) No. I2.

10.4.9 Ducts shown on the drawings for traffic signal cables shall not be used to carry any other type of service.

10.4.10 The minimum cover for ducts laid in the carriageway shall be 750mm. The ducts shall be bedded in accordance with detail Type B in HCD I2.

10.4.11 Where ducting in the carriageway has less than 750 mm cover, the ducts shall be bedded in accordance with detail Type A in HCD I2.

10.4.12 If any dispute on the bedding arises, then the full bedding requirements of HCD I2 shall apply.

10.4.13 The minimum cover for ducts laid in the footway/verge shall be 450mm the ducts shall be bedded in accordance with detail Type L in HCD F2.

10.4.14 Where it may be necessary to lay ducts in the footway/verge with less than 450mm cover, the TCU shall be consulted on requirements. The minimum bedding detail shall be Type Z in Highway Construction Detail F1. Depending on the circumstances and at the TCU's discretion, the depth of concrete backfill may be increased.

10.4.15 The sharing of ducts will not be permitted; therefore communication cables, bus priority cables, CCTV cables and traffic signal cables will be housed in separate ducts.

10.4.16 If written permission for any deviations from this document is not obtained as detailed above, then the installation will not be accepted at the Handover Inspection.

10.4.17 Mains power supply cables shall not be housed within the traffic signal ducting.

10.4.18 All frames and covers shall comply with BS EN 124:1994 with the class as specified and the following:

(i)	Materials	Ductile Iron
(ii)	Surface Coating	To BS 4164
(iii)	Seating	Non rocking design
(iv)	Clear Opening	As shown on the drawing
(v)	Frame bearing Area	As shown on the drawing
(vi)	Frame Depth	100mm (minimum)
(vii)	Lifting Holes in Frame	Two Prising Slots
(viii)	Keyways in Cover	Two Closed Keyways
(ix)	Minimum PSV of Cover	45
(x)	Badged	Traffic Signals

10.5 Access Chambers

10.5.1 Access chambers must be manufactured from high grade recycled polypropylene and be completely recyclable at the end of life.

10.5.2 Access chambers shall be a twin-wall design and assembled from stackable 150mm deep sections.

10.5.3 Access chambers must be tested to withstand a minimum vertical load of 40 tonnes without the use of concrete surround for support.

10.5.4 External walls shall have an external rib of width no greater than 15mm, positioned at the bottom of each section, to allow full section depth compaction.

10.5.5 External walls shall be free from moulding voids that will negatively impact the effectiveness of compaction which should be in accordance with the New Roads and Street Works Act (1991).

10.5.6 Access chambers must not be jointed in the corner or require mechanical fixing to achieve strength.

10.5.7 Access chamber sections must have the ability to be adjusted in height during installation by being cut laterally without loss of strength to allow for transitional gradient installations.

10.5.8 Access sections should have pre-drilled duct entries and be supplied with removable caps.

10.5.9 Access chambers must have the ability to allow internal cable management furniture to be retrofitted without the need for any excavation

10.5.10 Composite covers must be EN124 with a C250 (25 tonne) loading.

10.5.11 The galvanised steel frame must be independently load tested to 15 tonnes

10.5.12 Composite covers must have a minimum skid resistance value (SRV) of 80

10.5.13 Composite covers must be supplied with lockable Steel frames which are hot dipped Galvanised to BS EN ISO 1461:2009.

10.5.14 Covers and frames shall achieve quietness in use when located in the carriageway.

10.5.15 Frames must have a minimum up stand of 85mm.

10.5.16 Frames must be supplied with a fixing mechanism which enables them to be secured to the Access chamber.

10.5.17 Carriageway loop box must be constructed in ductile iron to BS2789.

10.5.18 Loop Chambers must be suitable for carriageway installations with an EN124 D400 40 tonne load certified single cover.

10.5.19 Loop Chambers must be supplied with a minimum of 4 entry points for loop cables.

10.5.20 All entry points must be sealed if not in use.

10.5.21 All loop chambers must be supplied with positive base entry connections for 110mm and 63mm ducting.

10.5.22 Loop Chambers must be octagonal in shape to enable core drilling installation.

10.5.23 Loop Chambers must be provided with a base sealing plug which allows the loop cables to pass through it c/w 2 x rubber 6mm bungs.

10.6 Carriageway Loop Box (CLB)

10.6.1 The CLB has been designed with the aim of facilitating the easy routing of loop tails under the kerb, or edge of the carriageway, and into the footway, or verge, where the connections to the loop feeder cables are made.

10.6.2 The CLB is shown in drawing no SCC-TS-SD001 and SD018.

10.6.3 The CLB shall be of cast metal construction, structural performance and further details are on the drawing SCC-TS-SD018.

10.6.4 To aid future re-cutting operations generally the maximum number of separate loops being fed into a CLB shall be one, however up to three can be accommodated into each CLB, only one loop tail shall enter the CLB per side. Groups of four or more (separate) loops shall be split and fed into a second CLB which shall be a minimum of 1.0m distant from the first CLB. The duct can be fed to the same footway chamber.

10.6.5 The CLB shall have its sides cut approximately 30mm wide and 100mm deep, when insitu, by the slot cutting Contractor to accommodate the ingress of the loop tails. A third side, opposite the kerb may also be similarly cut. Any rough edges produced shall be removed before passing the loop tail through the slots.

10.6.6 A single 50 mm diameter duct, shall be laid under the kerb with a 90° slow bend into the CLB and terminating at a MDB in the footway. The duct from the CLB or multiple CLB's may also terminate at a LDB, XLDB or CIC at the discretion of the TCU.

10.6.7 A draw cord shall be provided in the duct where the distance between CLB and MDB is greater than 2m.

10.6.8 An end cap or plug shall be placed over the vertical end of the duct in the CLB at the time of construction. This will prevent the ingress of foreign matter.

10.6.9 The positioning of CLB's is fairly critical so that loop tails is minimised so early consultation with the TCU will be of benefit during the design process.

10.7 Medium Duct Box (MDB)

10.7.1 The MDB shall be installed in the footway to facilitate the jointing of loop tails to the loop feeder cable, and to intersect the duct network at changes in direction. The LDB may be used in exceptional circumstances instead of the MDB with the approval of the TCU, structural performance and further details are on the drawing.

10.7.2 The MDB is shown in drawing No's.SCC-TS-SD001 and SD014.

10.7.3 On long duct runs a MDB shall be provided no more than 50m apart.

10.7.4 The MDB shall be installed preferably adjacent to the kerb or alternatively at the back of the footway, unless otherwise approved by the TCU.

10.8 Large Duct Box (LDB)

10.8.1 The LDB shall be used in place of the MDB where the numbers of ducts which intersect exceed the space available for a MDB or where a duct run is required to cross the carriageway or where the depth of the ducts requires its use, structural performance and further details are on the drawing.

10.8.2 The LDB is shown in drawing No’s.SCC-TS-SD001 and SD014.

10.9 Extra Large Duct Box (XLDB)

10.9.1 The XLDB shall be used in place of the LDB where the numbers of ducts which intersect exceed the space available for a LDB or where the depth of the ducts requires its use, structural performance and further details are on the drawing.

10.9.2 The XLDB is shown in drawing No’s.SCC-TS-SD001 and SD014.

10.10 Controller Inspection Chamber (CIC)

10.10.1 The (CIC) shall be installed in the footway or verge adjacent to the controller or miscellaneous equipment cabinet to facilitate the inspecting of and installation of cable into the controller equipment cabinet, unless otherwise approved by the TCU, structural performance and further details are on the drawing.

10.10.2 The (CIC) is shown in drawing No’s.SCC-TS-SD001,SD014 and SD016.

10.10.3 The (CIC) shall have as many inlets to accommodate the ducts originating from the MDB's, LDB's, and PRS's and or outlets to accommodate the ducts that run to other MDB's, LDB's, and PRS's and equipment housing as may be necessary. On pre-formed chambers only outlets appropriate to the size of the duct are to be cut out. Normally three 100mm ducts for junction signals or two for mid block crossings or such number as directed by the TCU shall be laid from the (CIC) towards the equipment housing or traffic signal controller cabinet.

10.10.4 A black 50mm duct shall be installed directly into the preformed void under the controller and shall be connected into the ESH. The ESH is typically located alongside the controller and shall have a second black duct laid in the direction of the electricity service provider's first available power source as specified by that provider. Occasionally a grey 37.5mm or 50mm duct may be required and installed directly into the preformed void under the controller. The grey duct shall be directed towards the telecommunication service provider's first available connection point as specified by that provider.

10.11 Tactile Paving and Dropped kerbs

10.11.1 Tactile paving and dropped kerbs for all pedestrian crossings shall be constructed to our standard drawing number SCC-TS-SD018*.

10.11.2 Tactile slabs will be constructed of a concrete/stone material and be the same dimensions as laid down in SCC-TS-SD-007. The use of 'stick on tactile tiles' or similar adhered products are strictly prohibited.

10.11.3 The setting out and alignment of the tactile paving and dropped kerbs shall be for the whole crossing and not for a single side at a time. The tactile paving shall be aligned using a temporary string line or similar pulled taught across the carriageway and marked out on the front and back of the footway on both sides of the carriageway as a minimum. On a standard width crossing of 2.4m the line is best placed at the middle of the crossing allowing both stems of tactile paving to be aligned.

10.11.4 If the red tactile paving is planned to be installed within a surface where the colour is similar in shade, then a contrasting coloured demarcation strip of no less than 150mm wide will be provided around the extent of the tactile area. The demarcation strip must be finished flush to the surrounding paving and materials such as block paving or paving slabs have been used successfully in achieving the desired contrast in colour. Paint will not be an acceptable finish due to slippage and maintenance issues. The preferred arrangement utilises Ballotini marker blocks (200mm x 100mm), which should be laid 200mm wide.

10.12 Loops and Slot Cutting

10.12.1 Detector loops shall be of the type and size specified on the contract drawings.

10.12.2 All slot cutting and installation of cables in slots shall be conducted in accordance with the requirements of the Welsh Office Specification WOEM 1000.

10.12.3 Loop cables and loop feeder cables shall comply with the requirements of the Welsh Office Specifications WOEM 1008 and WOEM 1009.

10.12.4 Slot cutting through channel blocks or kerbs will not be permitted. Carriageway loop boxes shall be provided at each loop location as detailed on standard drawing number SCC-TS-SD018.

10.12.5 Slot cutting can only commence once sufficient stop lines and lane markings have been laid in the correct location. If for any reason slot cutting takes place prior to the laying of road markings, and are subsequently found to be incorrect, the loops shall be recut (without cost to the authority) in the correct position approved by the TCU.

10.12.6 All traffic signal installations, where pedestrian facilities are provided, require high friction surfacing treatment to be installed for a minimum distance of 50m on each approach, from its associated stop line. This will be achieved with the installation

of Chinese Bauxite to a point 1m short of the stop line and then will be continued from that point up to the associated stud line in a grey coloured material of the same PSV. If the approach has an advance cycle stop line installed then the grey colour will continue up to the vehicle stop line, where its colour will change to the red coloured high friction surfacing used for the advance cycle stop line.

10.12.7 When high friction surfacing is being laid after the loops have been cut, then the loops and their tails shall be masked out prior to any application of the high friction surfacing. The masking material shall be removed after application of the surfacing. This will leave the loops and their tails visible so that statutory undertakers are able to see them and avoid damaging them, and for maintenance purposes.

10.12.8 If slot cutting takes place after the laying of high friction surfacing, the slot cutting company may add an extra over cost due to the harder material blunting the cutting discs faster.

10.13 Road Markings

10.13.1 Unless otherwise directed by the Highway Authority all markings shall conform to the requirements of The Traffic Signs Regulations and General Directions and subsequent amending regulations.

10.14 Road Studs

10.14.1 The Principal Contractor shall be responsible for the correct setting out of all studs.

10.14.2 The 'pitch' of studs or mark used to delineate pedestrian crossing(s) shall be 0.50m subject to the tolerances permitted by the appropriate regulations. The minimum distance from any kerb to the first stud or mark shall be 0.5m and the maximum distance from any kerb to the first stud or mark shall be 0.7m

10.14.3 Surface mounted studs are not acceptable.

10.14.4 Only road studs manufactured of Stainless Steel will be accepted. They shall be square silver in colour and between 95mm and 110mm square.

10.14.5 Redundant sockets shall be primed in accordance with the Specification for Highway Works Section 901.22 and backfilled with 6mm medium graded macadam. Where approved by the Overseeing Organisation a proprietary bituminous material installed in accordance with the manufacturer' instructions may be used.

11 TRAFFIC SAFETY AND MANAGEMENT

11.1.1 Traffic Safety and Management shall comply with Section 117 of the Specification for Highway Works.

11.1.2 Traffic signing, management and control for all aspects of signal installation and maintenance works shall comply with Chapter 8 of the Traffic Signs Manual. Proposals for traffic management shall be approved by the TCU prior to commencement of the works.

11.1.3 The 'x' height of the sign must be appropriate to the 85%ile of the speed of traffic on the road it is to be mounted on.

11.1.4 Prior to the SAT of new installations, temporary signs shall be provided and erected on each approach, and maintained in position for a minimum of 3 months. The signs shall be in accordance with the Traffic Signs Regulations & General Directions 2016 (TSRGD), Diagram 569.2 (NEW TRAFFIC SIGNALS AHEAD). They shall be manufactured using class 1 retro-reflective material or Diamond Grade as a minimum standard on an aluminium substrate. The signs will be sited as approved by the TCU. The signs and any associated posts will removed and permanent reinstatement where necessary prior to adoption

11.1.5 Permanent signs shall be considered in consultation with the Highway Authority. They shall be to TSRGD Diagram 543 (Traffic Signals Ahead). Such signs are to be externally illuminated when situated within 50m of a street lighting system. They shall be manufactured using class 1 retro-reflective material or Diamond Grade as a minimum standard on an aluminium baseplate.

11.1.6 The Principal Contractor shall be responsible for clearing parked vehicles and other obstructions from the carriageway and shall:

a) provide and distribute information leaflets approved by the Highway Authority where appropriate.

b) take measures approved by the Police and the Highway Authority to restrict vehicle obstruction.

c) consult with the Police, residents and others concerned to remove the obstructions.

d) make multiple visits to the site if necessary to complete the works.

For any items not specifically covered within this document, but where further clarification is required please contact the TCU on 0300 123 2224

APPENDIX A

List of Standard Drawings

SCC-TS-SD-001	Access Chamber Details
SCC-TS-SD-002	Stopline/System D Loops – Setting Out/Construction Details
SCC-TS-SD-003	Ducting Layout
~~SCC-TS-SD-004~~	Removed
SCC-TS-SD-005	Typical Controller and MEC Cabinet Foundation Details
SCC-TS-SD-006	Tactile Paving and Signal Poles General Setting Out Detail
SCC-TS-SD-007	Tactile Paving Detail
SCC-TS-SD-008	Tactile Paving and Dropped Kerbs with Channel Blocks
SCC-TS-SD-009	Pedestrian Refuge Standard Layout
SCC-TS-SD-010	Puffin Crossing Equipment Arrangement
SCC-TS-SD-011	Toucan Crossing Equipment Arrangement
SCC-TS-SD-012	High Friction Surfacing
SCC-TS-SD-013	Signal Pole Detail
SCC-TS-SD-014	Access Chamber Construction Detail
SCC-TS-SD-015	Typical External Cabinet Details
SCC-TS-SD-016	Requirements for Chambers, Controllers and Cabinets
SCC-TS-SD-017	Remote Signal Pole Unit Details
SCC-TS-SD-018	Carriageway Loop Tail Access Chamber
~~SCC-TS-SD-019~~	Removed
SCC-TS-SD-020	Standard Kerb Details (to BS EN 1340)

APPENDIX B

Inspection Certificate

INSPECTION CERTIFICATE

I Certify that the Traffic Signal installation at; …… has been inspected and tested, in accordance with IEE Regulations for electrical installations (17th Edition) and that the results are satisfactory in the respect mentioned below, except as indicated in the comments below.

I recommend that the installation for further inspections as follows;

Earth fault loop impedance at origin and pushbuttons – Annually
Remainder of installation tests – Three Years

TYPE OF EARTHING ARRANGEMENTS	*TNCS/TNS
PROSPECTIVE SHORT CIRCUIT CURRENT AT THE ORIGIN	Amps
EARTH LOOP IMPENDANCE AT ORIGIN	Ohms
INSULATION RESISTANCE OF THE FIXED INSTALLATION	>0.5Mohms *Yes/No
POLARITY CHECKED AT CONTROLLER SWITCH	*Yes/No
OPERATIONAL OR RESIDUAL CURRENT OPERATED DEVICES FOR EARTH FAULT PROTECTION	m/S

VISUAL INSPECTION

LANTERNS INSTALLED AND FOCUSED AS PER STS	*Yes/No
PUSHBUTTON DOORS CLOSED AND LOCKED	*Yes/No
ALL POLE CAPS SECURLY FITTED	*Yes/No
CONTROLLER BASE SEALED	*Yes/No
ALL EARTH CONNECTION CHECKED	*Yes/No
ALL TERMINATION'S CHECKED	*Yes/No

(*DELETE AS NECESSARY)

EARTH LOOP IMPEDANCE MEASURED AT POLES

POLE No.	Result	POLE No.	Result	POLE No.	Result	POLE No.	Result	POLE No.	Result

SIGNED……..POSITION……..……DATE……

APPENDIX C

Checklist for Installation Site Records

Site Name ……

Site Reference Number ……..

All of the following documents are to be supplied prior to the Hand-over Inspection and prior to acceptance by the Highway Authority in accordance with Section 4.8. All items shown with an asterisk must be supplied prior to the Site Acceptance Test commencing.

	To Be Supplied
Signal equipment schedule*	
Controller configuration file (hardcopy) *	
Controller configuration file (electronic copy)	
FAT documentation*	
Green conflict test certificate *	
Loop resistance schedule*	
Cabling schedule *	
Electrical Completion Certificate and ELI schedule *	
Earth Loop Impedance test schedule for poles and controller *	
Interim Site Acceptance Test certificate	
Final Site Acceptance Test certificate	
Mova dataset (electronic copy) – If applicable	
Fully updated As-Built drawing (hardcopy)	
Fully updated As-Built drawing (electronic copy)	
Junction staging diagram	
Stage 1 Safety Audit	
Stage 2 Safety Audit	
Stage 3 Safety Audit	
All exception responses to Safety Audits	
Copy of site diary	
Pre-Construction Health and Safety Plan	
Construction Phase Health and Safety Plan	

Rev	Description	By	Date	Chk'd	Auth
F	Update Spec V4	JK	11/17	RJN	BN

ACCESS CHAMBERS (FOR CONSTRUCTION DETAILS SEE DETAIL SCC-TS-SD014)

SHORT NAME	DESCRIPTION	SCC CHAMBER TYPE	SIZE	COVER TO DUCT	SIDE ELEVATION	END ELEVATION	USAGE
XSDB	EXTRA SMALL DUCT BOX	TYPE 1	300 x 300	450			FOOTWAY / VERGE DUCT RUNS
	EXTRA SMALL DUCT BOX	TYPE 1A	300 x 300	750			CARRIAGEWAY DUCT RUNS
SDB	SMALL DUCT BOX	TYPE 2	450 x 300	450			FOOTWAY / VERGE DUCT RUNS
	SMALL DUCT BOX	TYPE 2A	450 x 300	750			CARRIAGEWAY DUCT RUNS
MDB	MEDIUM DUCT BOX	TYPE 3	450 x 450	450			FOOTWAY / VERGE DUCT RUNS
	MEDIUM DUCT BOX	TYPE 3A	450 x 450	750			CARRIAGEWAY DUCT RUNS
LDB	LARGE DUCT BOX	TYPE 4	600 x 450	450			FOOTWAY / VERGE DUCT RUNS
	LARGE DUCT BOX	TYPE 4A	600 x 450	750			CARRIAGEWAY DUCT RUNS
XLDB	EXTRA LARGE DUCT BOX	TYPE 5	600 x 600	450			FOOTWAY / VERGE DUCT RUNS
	EXTRA LARGE DUCT BOX	TYPE 5A	600 x 600	750			CARRIAGEWAY DUCT RUNS
CLB	CARRIAGEWAY LOOP BOX	TYPE 6	(150 X 150)	A/R	N/A	N/A	CARRIAGEWAY LOOPS
CIC	CONTROLLER INSPECTION CHAMBER	TYPE 5A	600 x 600	750			CONTROLLER CABLE FEED DUCTS

POLE RETENTION SOCKET (FOR CONSTRUCTION DETAILS SEE DETAIL SCC-TS-SD017)

SHORT NAME	DESCRIPTION	SCC CHAMBER TYPE	SIZE	COVER TO DUCT	PLAN VIEW	SIDE ELEVATION	END ELEVATION	USAGE
PRS	POLE RETENTION SOCKET	TYPE 7	160 X 340	MIN 450				SOCKET FOR STANDARD POLE (113mm)
PRS	POLE RETENTION SOCKET (LARGE)	TYPE 7L	160 X 340	MIN 1000				SOCKET FOR WIDE BASE POLE (168mm)

NOTES

1. ALL DIMENSIONS IN MILLIMETERS UNLESS OTHERWISE STATED.
2. ALL COVERS AND FRAMES FOR SIGNAL CHAMBERS SHALL COMPLY WITH BS EN124 C250 (25 TONNES) UNLESS OTHERWISE STATED.
3. ONLY APPROVED POLE RETENTION SOCKETS TO BE USED

THE ACCURACY OF THIS DRAWING CANNOT BE GUARANTEED AND SOMERSET COUNTY COUNCIL DOES NOT ACCEPT RESPONSIBILITY FOR ANY INACCURACIES OR OMISSIONS.

Somerset County Council ©
Traffic & Transport Development Group

County Hall
Taunton
Somerset
TA1 4DY

TEL: (0300) 123 2224
www.somerset.gov.uk

Client: SOMERSET COUNTY COUNCIL

Project: Traffic Control Standard Detail

Title: ACCESS CHAMBERS & RETENTION SOCKETS

Scale	Design	Check	Auth
N/A	MA	JH	KPJ
	Date 04/05	Date 04//05	Date 09/05

FILE NAME: SCC-TS-SD001-F

Drawing Number: SCC-TS-SD001

Rev: F

Status: -

Rev	Description	By	Date	Chk'd	Auth
D	Update Spec V4	JK	03/17	RJN	BN

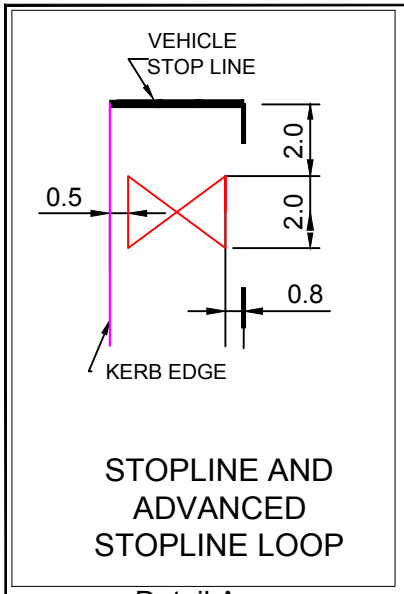

Detail A

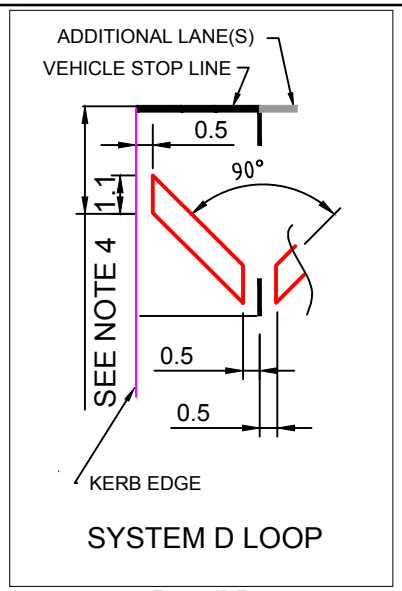

Detail B

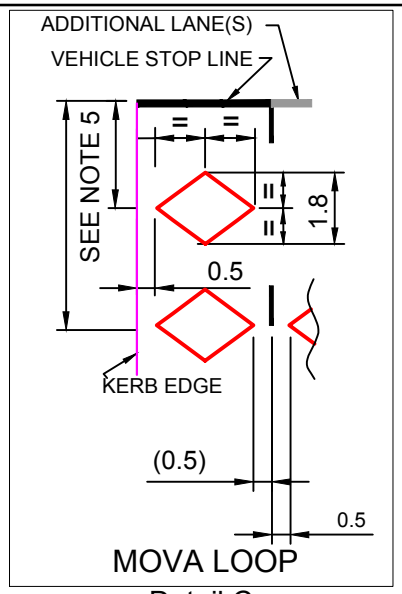

Detail C

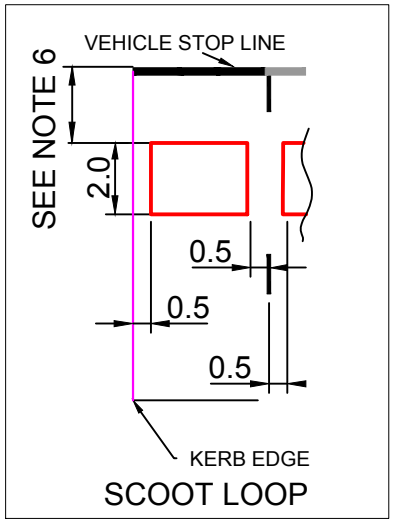

Detail D

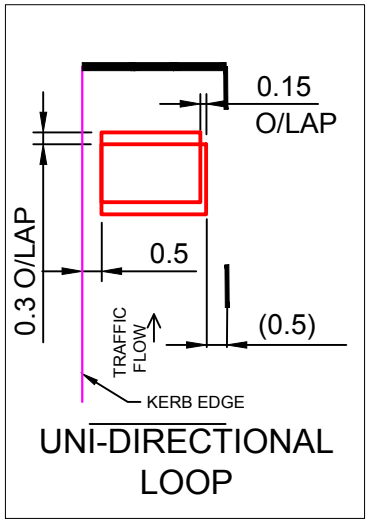

Detail E

NOTES

1. ALL DIMENSIONS IN METRES
2. ALL WORK TO BE CARRIED OUT IN ACCORDANCE WITH THIS DOCUMENT.
3. ALL LOOPS TO BE 3 TURNS OF CABLE
4. SYSTEM D LOOP LAYOUT VARIES WITH NUMBER OF LANES AND SITE LAYOUT.
5. MOVA LOOP POSITION FROM STOPLINE AND KERB EDGE DEPENDS ON TRAFFIC SPEED AND SITE CONDITIONS. SEEK ADVICE.
6. SCOOT LOOP POSITION WILL DEPEND ON SITE CONDITIONS AND LOCATION. SEEK ADVICE.
7. SEE DETAIL SCC-TS-SD018 FOR DETAILS OF CLB (CARRIAGEWAY LOOP BOX).
8. GENERAL:-0.5m CLEARANCE BETWEEN LOOP AND CARRIAGEWAY EDGE. 0.5m CLEARANCE BETWEEN LOOPS IN LANES. LAYOUT OF LOOPS WILL CHANGE WITH MULTIPLE LANES AND SITE CONDITIONS. SEEK ADVICE.
9. THE ACCURACY OF THIS DRAWING CANNOT BE GUARANTEED AND SOMERSET COUNTY COUNCIL DOES NOT ACCEPT RESPONSIBILITY FOR ANY INACCURACIES OR OMISSIONS.

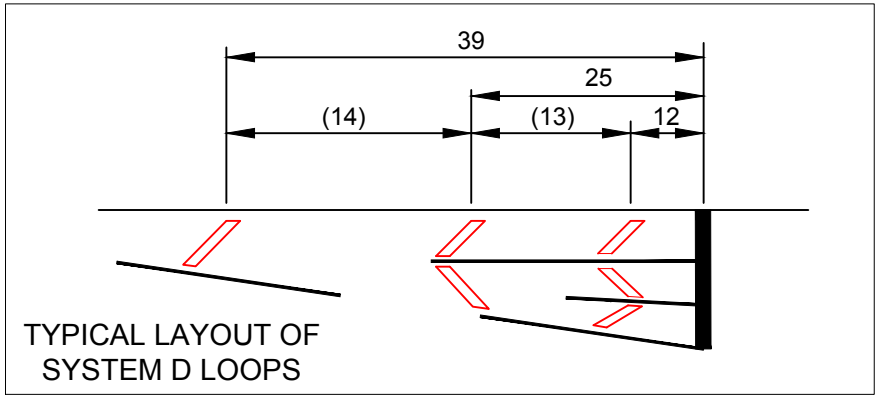

Detail F

THE ACCURACY OF THIS DRAWING CANNOT BE GUARANTEED AND SOMERSET COUNTY COUNCIL DOES NOT ACCEPT RESPONSIBILITY FOR ANY INACCURACIES OR OMISSIONS.

Somerset County Council ©
Traffic & Transport Development Group

County Hall
Taunton
Somerset
TA1 4DY

TEL: (0300) 123 2224
www.somerset.gov.uk

Client: SOMERSET COUNTY COUNCIL

Project: Traffic Control Standard Detail

Title: CARRIAGEWAY LOOP SETTING OUT & CONSTRUCTION DETAILS

Scale	Design	Check	Auth
N/A	MA	JH	KPJ
	Date 04/05	Date 04//05	Date 09/05

FILE NAME: SCC-TS-SD002-D

Drawing Number: SCC-TS-SD002

Rev: D

Status: -

Rev	Description	By	Date	Chk'd	Auth
C	Update Spec V4	JK	03/17	RJN	BN

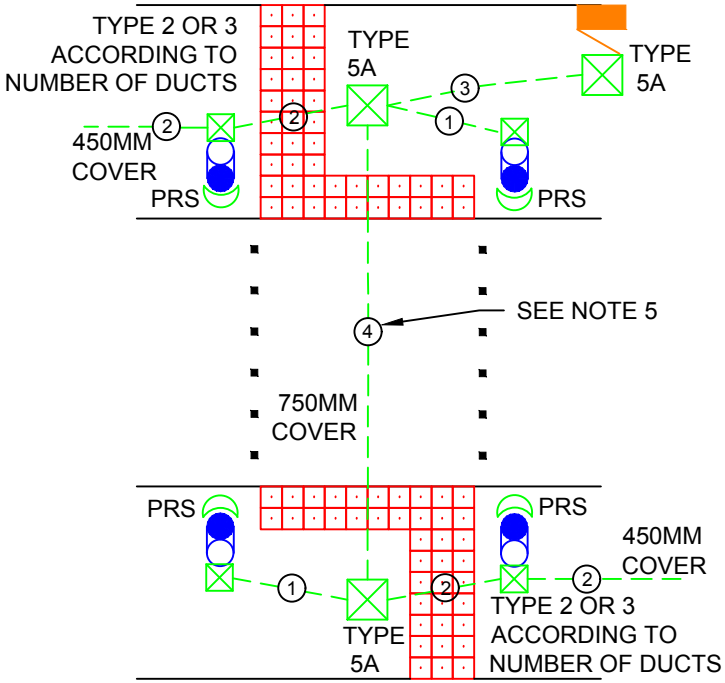

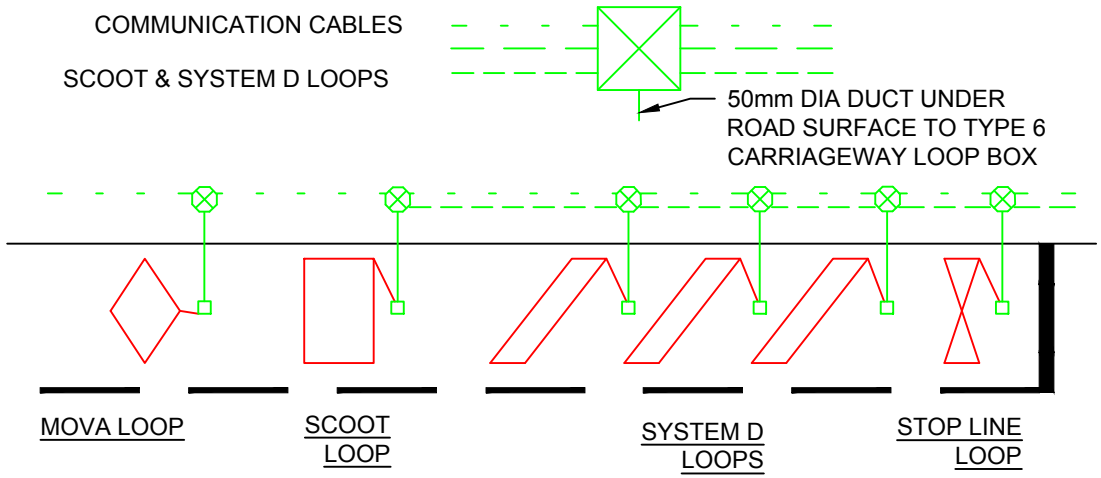

KEY

- SMALL OR MEDIUM DUCT BOX (TYPE 2 OR 3)
- CLB, CARRIAGEWAY LOOP BOX
- TRAFFIC SIGNAL POLE
- PRS, POLE RETENTION SOCKET (TYPE 7)
- 1 X 100MM DUCT FOR COMMS/UTC CABLE
- 1 X 100MM DUCT FOR SCOOT & SYSTEM D LOOP CABLE
- (4) NUMBER OF 1 X 100MM DUCTS
- TACTILE PAVING
- CROSSING STUDS

NOTES

1. ALL WORK TO BE CARRIED OUT IN ACCORDANCE WITH THIS DOCUMENT.
2. SEPARATE DUCTING REQUIRED FOR COMMUNICATION CABLES AND SCOOT/SYSTEM D/MOVA LOOPS.
3. ALL DUCTING UNDER FOOTWAYS & VERGES SHOULD HAVE AT LEAST 450MM COVER UNLESS OTHERWISE STATED.
4. DEPTH OF DUCT AT CONTROLLER CAN BE SHALLOWER THAN 750MM. HOWEVER MUST BE AT LEAST 750MM DEEP AT TYPE 5A CHAMBER SO THAT 2 WAY DUCTING CAN BE BROUGHT IN OVER 3 WAY DUCTING.
5. MINIMUM 4 X 100MM DUCTS WITH 750MM COVER FOR ROAD CROSSINGS AND DUCTING IN CARRIAGEWAY.
6. POWER CABLES AND COMMUNICATIONS CABLES INSTALLED IN ORANGE SIGNALS DUCTING MUST BE HOUSED IN THEIR OWN DUCTS SEPARATED FROM SIGNALS CABLES AND DETECTOR FEEDER CABLES.
7. THE SPACING OF CHAMBERS ALONG DUCT RUNS SHALL NORMALLY BE A MAXIMUM OF 30M BUT NEVER EXCEED 50M
8. 50MM DUCTING IS ALLOWED ONLY BETWEEN THE CARRIAGEWAY LOOP BOX AND ITS ADJACENT CHAMBER.
9. ALL DETAILS TO BE AGREED AT AN EARLY STAGE OF THE DESIGN WITH THE TCU.

THE ACCURACY OF THIS DRAWING CANNOT BE GUARANTEED AND SOMERSET COUNTY COUNCIL DOES NOT ACCEPT RESPONSIBILITY FOR ANY INACCURACIES OR OMISSIONS.

Somerset County Council ©
Traffic & Transport Development Group

County Hall
Taunton
Somerset
TA1 4DY

TEL: (0300) 123 2224
www.somerset.gov.uk

Client: SOMERSET COUNTY COUNCIL

Project: Traffic Control Standard Detail

Title: DUCTING LAYOUT

Scale	Design	Check	Auth
As N/A	MA	JH	KPJ
	Date 04/05	Date 04//05	Date 09/05

FILE NAME: SCC-TS-SD003-C

Drawing Number: SCC-TS-SD003

Rev: C

Status: -

Rev	Description	By	Date	Chk'd	Auth
D	Update Spec V4	JK	03/17	RJN	BN

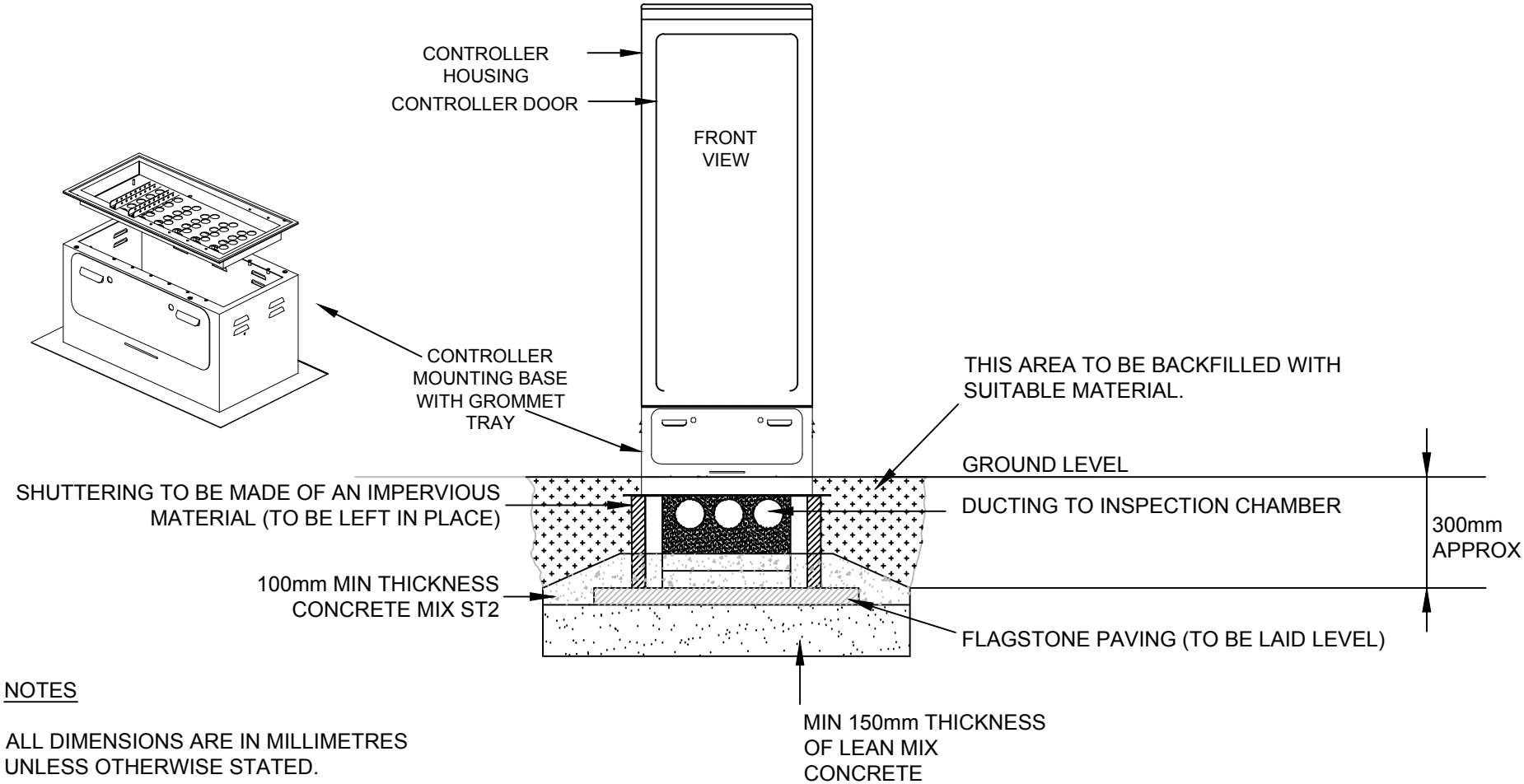

NOTES

1. ALL DIMENSIONS ARE IN MILLIMETRES UNLESS OTHERWISE STATED.
2. CONTROLLER MOUNTING BASE IS BE USED FOR ALL CONTROLLERS AND MEC CABINETS.
3. ALL WORK TO BE CARRIED OUT IN ACCORDANCE WITH THIS DOCUMENT.
4. THE ACCURACY OF THIS DRAWING CANNOT BE GUARANTEED AND SOMERSET COUNTY COUNCIL DOES NOT ACCEPT RESPONSIBILITY FOR ANY INACCURACIES OR OMISSIONS.

Somerset County Council ©
Traffic & Transport Development Group

County Hall
Taunton
Somerset
TA1 4DY

TEL: (0300) 123 2224
www.somerset.gov.uk

Client: SOMERSET COUNTY COUNCIL	Title: TYPICAL CONTROLLER & MISCELLANEOUS EQUIPMENT CABINET FOUNDATION DETAILS -	Scale: N/A	Design: MA, Date: 04/05	Check: LF, Date: 04//05	Auth: KPJ, Date: 09/05
Project: Traffic Control Standard Detail		FILE NAME: SCC-TS-SD005-D			
	Drawing Number: SCC-TS-SD005		Rev: D	Status: -	

Rev	Description	By	Date	Chk'd	Auth
D	Update Spec V4	JK	03/17	RJN	BN

NOTES

1. ALL DIMENSIONS ARE IN MILLIMETRES UNLESS OTHERWISE STATED.
2. ALL WORKS TO BE CARRIED OUT IN ACCORDANCE WITH THIS DOCUMENT.
3. ALL STREET FURNITURE TO HAVE A MINIMUM CLEARANCE OF 500mm FROM FACE OF KERB.
4. POLE RETENTION SOCKET (PRS) TO BE ASSEMBLED AS PER MANUFACTURERS INSTRUCTIONS.
5. POLE POSITION MUST BE AS SHOWN. ANY CHANGE MUST BE AGREED WITH THE TRAFFIC CONTROL TEAM IN ADVANCE.
6. NUMBER OF FULL MODULES REQUIRED DEPENDS ON DIRECTION OF PEDESTRIAN TRAFFIC. SEEK ADVICE.
7. THE POSITION OF THE FIRST STUD MUST BE NO MORE THAN 500MM FROM THE KERB EDGE.
8. THE ACCURACY OF THIS DRAWING CANNOT BE GUARANTEED AND SOMERSET COUNTY COUNCIL DOES NOT ACCEPT RESPONSIBILITY FOR ANY INACCURACIES OR OMISSIONS.

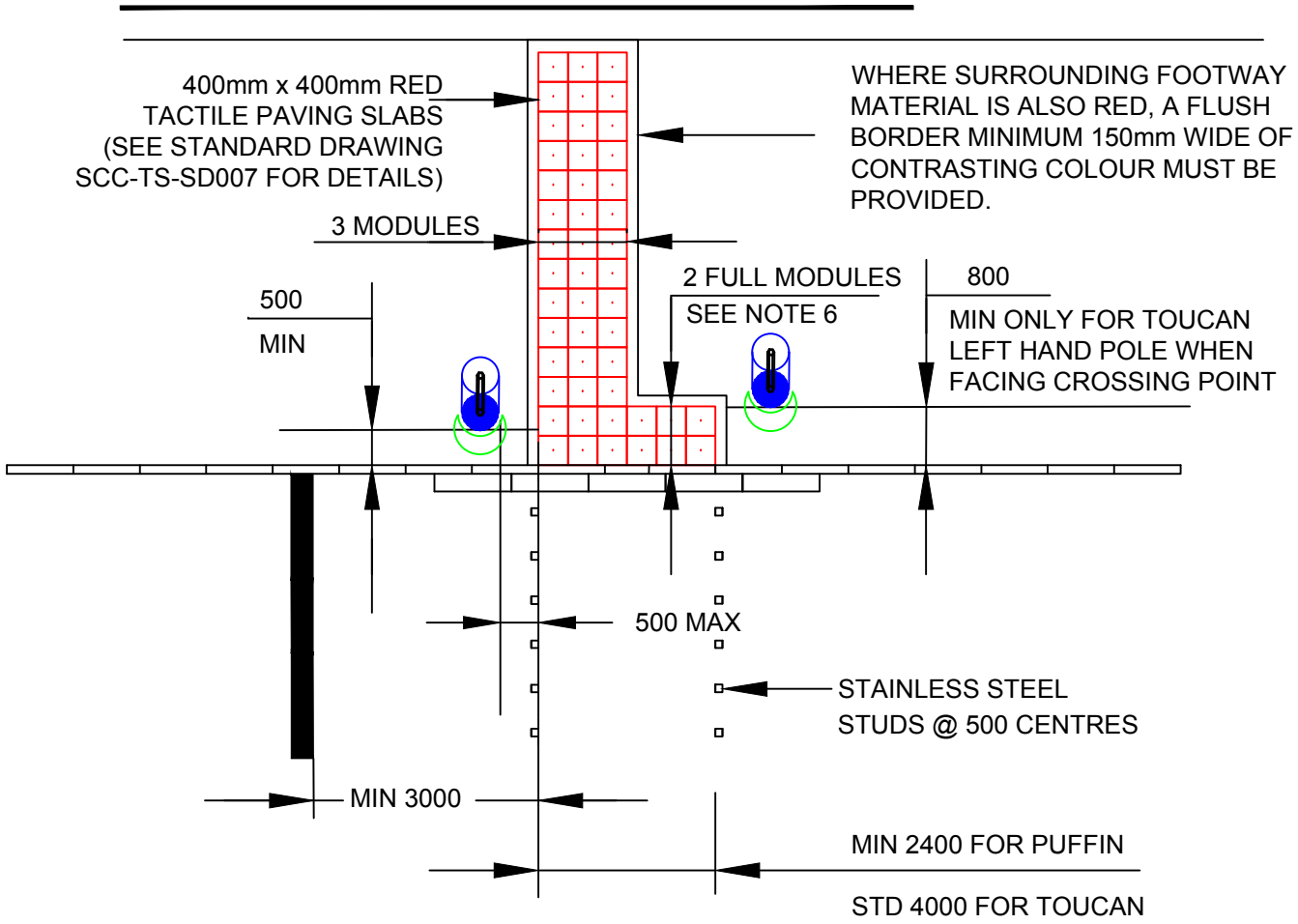

KEY:

SWAN NECK POLE AND POLE RETENTION SOCKET (PRS)

ST STEEL ROAD STUDS

RED TACTILE PAVING (400mm X 400mm)

Somerset County Council ©
Traffic & Transport Development Group

County Hall
Taunton
Somerset
TA1 4DY

TEL: (0300) 123 2224
www.somerset.gov.uk

Client	Title	Scale	Design	Check	Auth
SOMERSET COUNTY COUNCIL	TACTILE PAVING AND SIGNAL POLES GENERAL SETTING OUT DETAIL	N/A	MA	LF	KPJ
			Date 04/05	Date 04//05	Date 09/05
Project: Traffic Control Standard Detail		FILE NAME: SCC-TS-SD006-D			
	Drawing Number: SCC-TS-SD006		Rev D	Status -	

Rev	Description	By	Date	Chk'd	Auth
D	Update Spec V4	JK	03/17	RJN	BN

NOTES

1. ALL DIMENSIONS ARE IN MILLIMETRES UNLESS OTHERWISE STATED.

2. ALL WORK TO BE CARRIED OUT IN ACCORDANCE WITH THIS DOCUMENT

3. COLOUR:
RED FOR CONTROLLED CROSSINGS.
BUFF FOR UNCONTROLLED CROSSINGS.

4. MATERIALS:
THE TACTILE SURFACE MAY BE CONSTRUCTED FROM ANY MATERIAL SUITABLE FOR PAVING FOOTWAY SURFACES.

5. TACTILE PAVING TO BE LAID ON 50mm MORTAR BED.

6. THE ACCURACY OF THIS DRAWING CANNOT BE GUARANTEED AND SOMERSET COUNTY COUNCIL DOES NOT ACCEPT RESPONSIBILITY FOR ANY INACCURACIES OR OMISSIONS.

MODULE TYPE	SIZE	PITCH A	DIMENSION B
F	400 SQ	68.8	33
		TOLERANCE +- 2	

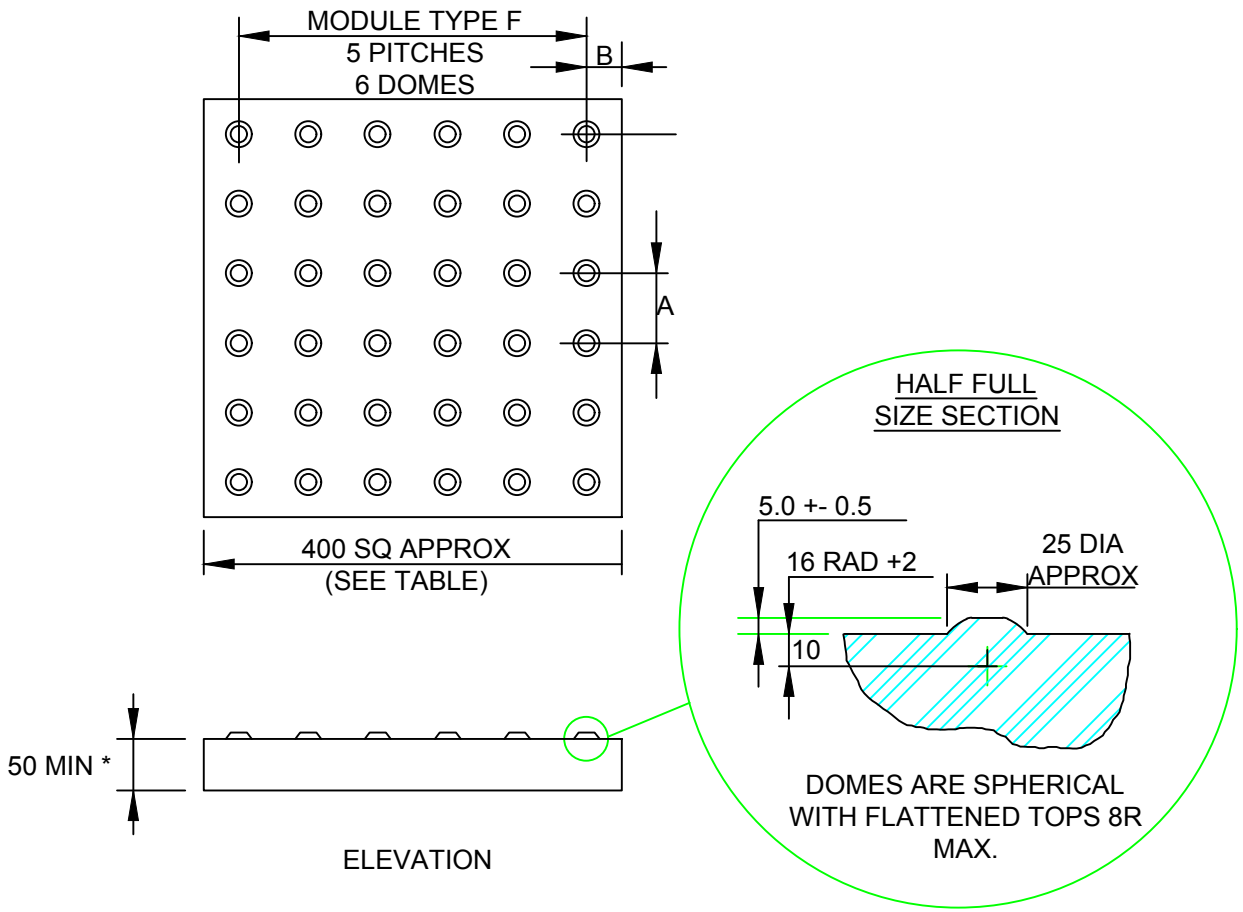

* THE ACTUAL DEPTH WILL BE RELATED TO THE MATERIAL USED TO CONSTRUCT THE MODULES.

Somerset County Council ©
Traffic & Transport Development Group

County Hall
Taunton
Somerset
TA1 4DY

TEL: (0300) 123 2224
www.somerset.gov.uk

Client	Title	Scale	Design	Check	Auth
SOMERSET COUNTY COUNCIL	TACTILE PAVING DETAIL	N/A	MA 04/05	LF 04//05	KPJ 09/05

Project: Traffic Control Standard Detail

FILE NAME: SCC-TS-SD007-D

Drawing Number	Rev	Status
SCC-TS-SD007	D	-

Rev	Description	By	Date	Chk'd	Auth
D	Update Spec V4	JK	03/17	RJN	BN

NOTES

1. ALL DIMENSIONS ARE IN MILLIMETRES UNLESS OTHERWISE STATED.

2. TACTILE PAVING TO BE LAID ON 50mm MORTAR BED.

3. A GULLY SHALL BE INSTALLED IMMEDIATELY PRIOR TO THE TAPER KERBS ON THE UPHILL SIDE OF THE CROSSING.

4. THE DEPTH OF THE CONCRETE FOUNDATION SHALL NOT BE LESS THAN THE MINIMUM SHOWN AND SHALL BE SUFFICIENT TO ALLOW THE FOUNDATION TO BE PLACED ON OR BELOW THE TOP OF THE SUB-BASE COURSE.

5. CHANNEL BLOCK FACE ABUTTING WEARING COURSE SHALL BE PAINTED WITH 40/60 OR 50/70 PEN HOT BITUMEN TO BS EN 12591

6. NOTWITHSTANDING OTHER TOLERANCES IN THE SPECIFICATION, THE FINISHED LEVEL OF THE CHANNEL BLOCK SHALL BE FLUSH (±0mm) WITH THE EDGE OF THE ADJACENT CARRIAGEWAY & THE DROPPED KERB. THE DROPPED KERB SHALL BE FLUSH WITH THE TACTILE PAVING.

7. SEE SCC-TS-SD011 FOR ARRANGEMENT OF KERBS FOR TOUCAN (4m) CROSSING

8. ALL WORK TO BE CARRIED OUT IN ACCORDANCE WITH THIS DOCUMENT.

9. THE ACCURACY OF THIS DRAWING CANNOT BE GUARANTEED AND SOMERSET COUNTY COUNCIL DOES NOT ACCEPT RESPONSIBILITY FOR ANY INACCURACIES OR OMISSIONS.

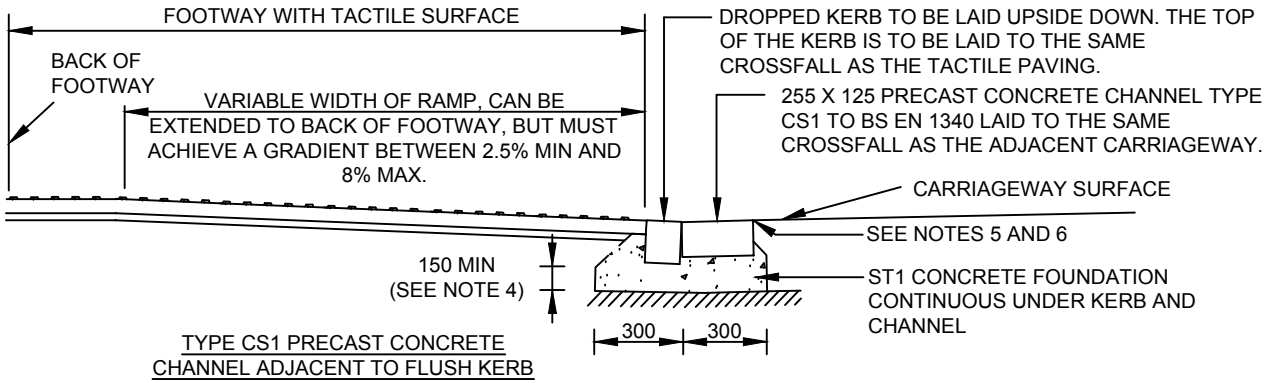

TYPE CS1 PRECAST CONCRETE CHANNEL ADJACENT TO FLUSH KERB

NOTE: THE SURFACE ARRANGEMENT WILL DEPEND ON CROSSING LOCATION AND MAY BE DIFFERENT TO THAT SHOWN.

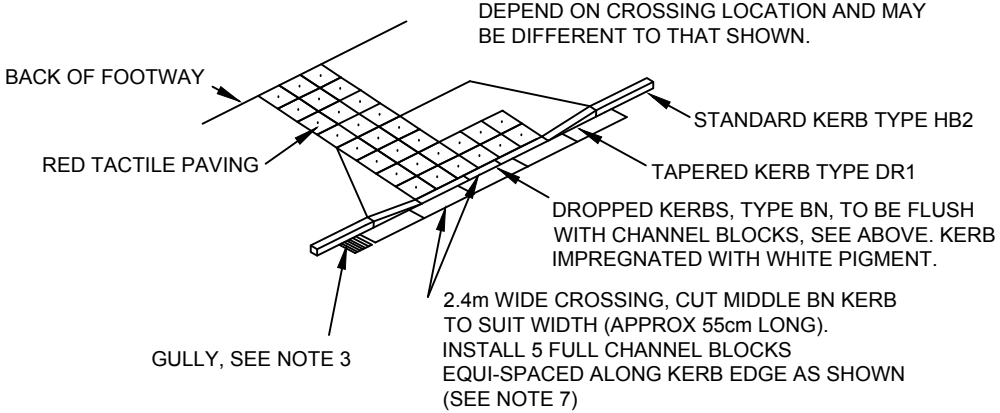

Somerset County Council ©
Traffic & Transport Development Group

County Hall
Taunton
Somerset
TA1 4DY

TEL: (0300) 123 2224
www.somerset.gov.uk

Client	Title	Scale	Design	Check	Auth
SOMERSET COUNTY COUNCIL	TACTILE PAVING AND DROPPED KERBS WITH CHANNEL BLOCKS	N/A	MA	LF	KPJ
			Date 04/05	Date 04//05	Date 09/05
Project: Traffic Control Standard Detail		FILE NAME: SCC-TS-SD008-D			
	Drawing Number: SCC-TS-SD008		Rev D	Status -	

Rev	Description	By	Date	Chk'd	Auth
D	Update Spec V4	JK	03/17	RJN	BN

KEY

- SWAN NECK TRAFFIC SIGNAL POLE
- XLDB - EXTRA LARGE DUCT BOX, TYPE 5A , 600 x 600 @ 750 DEPTH
- MDB- MEDIUM DUCT BOX, TYPE 3, 450 x 450 @ 450 DEPTH
- PRS- POLE RETENTION SOCKET TYPE 7
- SIGNAL DUCT RUN SHOWING NUMBER OF DUCTS
- TACTILE PAVING (SEE NOTE 3)
- CHANNEL BLOCK,
- BULLNOSE KERB
- DROP KERB, TYPE DR1 OR DL1

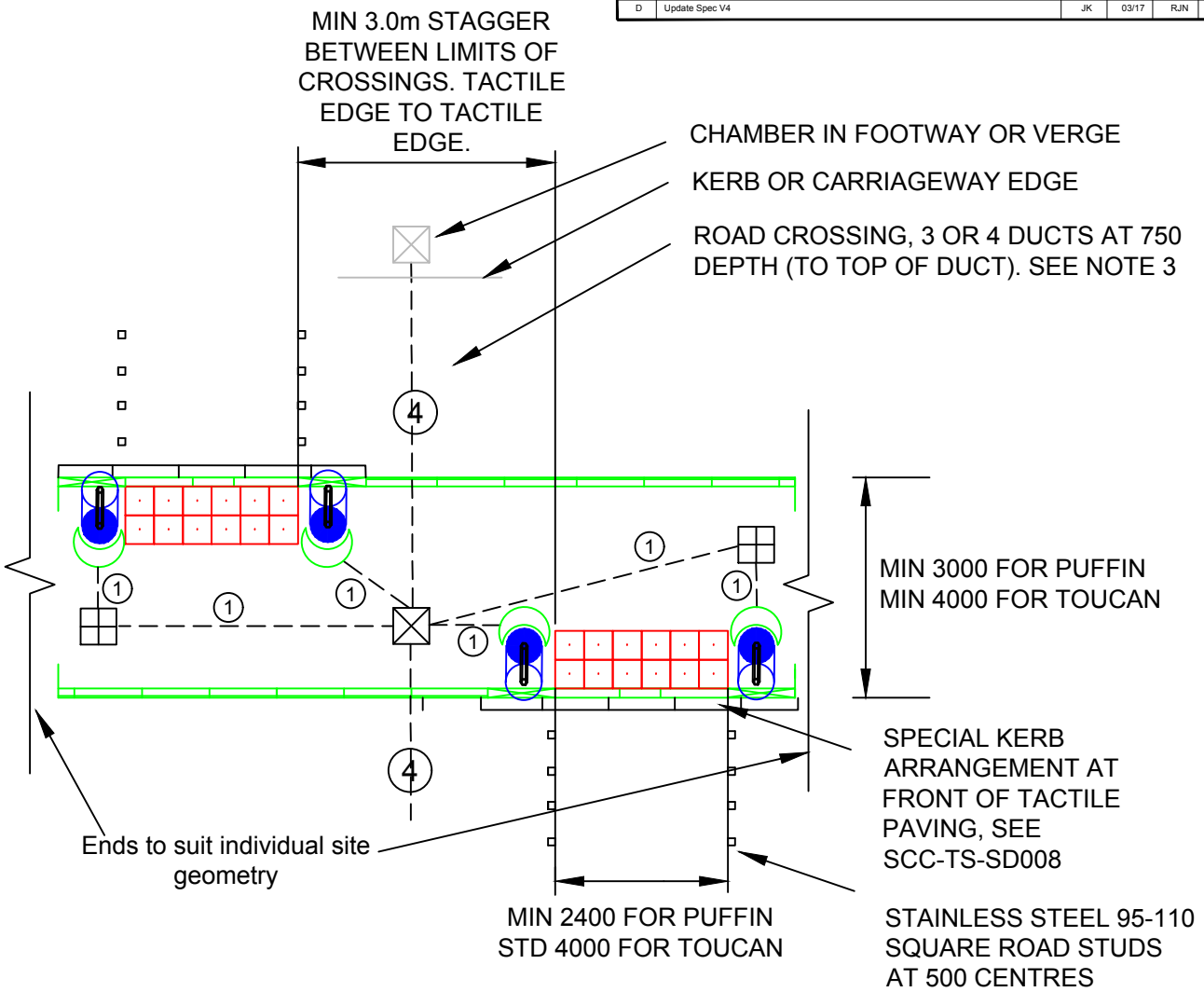

NOTES

1. ALL DIMENSIONS ARE IN MILLIMETRES UNLESS OTHERWISE STATED.
2. ALL WORKS TO BE CARRIED OUT IN ACCORDANCE WITH THE SCC TRAFFIC CONTROL SPECIFICATION AND GUIDELINES
3. FOR DETAIL OF CHAMBER TYPE, CHAMBER INSTALLATIONS, SIGNAL POLES AND TACTILE PAVING SEE STANDARD DETAIL DRAWINGS SCC-TS-SD001 TO SD018.
4. ALL KERBS TO BS EN 1340. FOR KERB DETAILS SEE DRAWING SCC-TS-SD020
5. THE USE OF MINI SAFETY KERBS MAY BE ACCEPTABLE SUBJECT TO SITE CONDITIONS. WHEN USED THIS SAVES ON THE NEED FOR PEDESTRIAN GUARD RAILING.
6. THE ACCURACY OF THIS DRAWING CANNOT BE GUARANTEED AND SOMERSET COUNTY COUNCIL DOES NOT ACCEPT RESPONSIBILITY FOR ANY INACCURACIES OR OMISSIONS.

Somerset County Council ©
Traffic & Transport Development Group

County Hall
Taunton
Somerset
TA1 4DY

TEL: (0300) 123 2224
www.somerset.gov.uk

Client	Title	Scale	Design	Check	Auth
SOMERSET COUNTY COUNCIL	PEDESTRIAN REFUGE STANDARD LAYOUT	N/A	MA Date 04/05	LF Date 04//05	KPJ Date 09/05
Project: Traffic Control Standard Detail			FILE NAME: SCC-TS-SD009-E		
Drawing Number	SCC-TS-SD009		Rev E	Status -	

Rev	Description	By	Date	Chk'd	Auth
E	Notes rewrite	JK	05/18	JK	BN

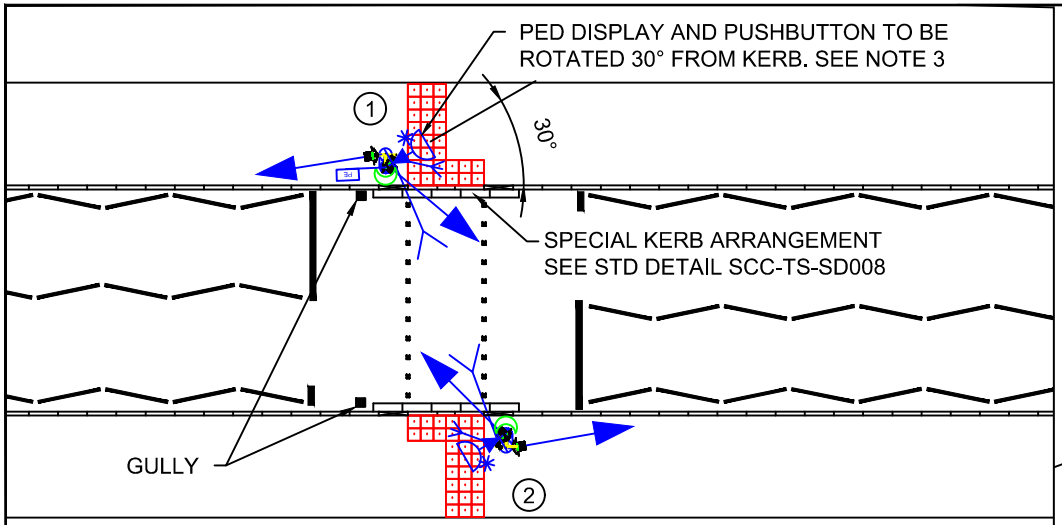

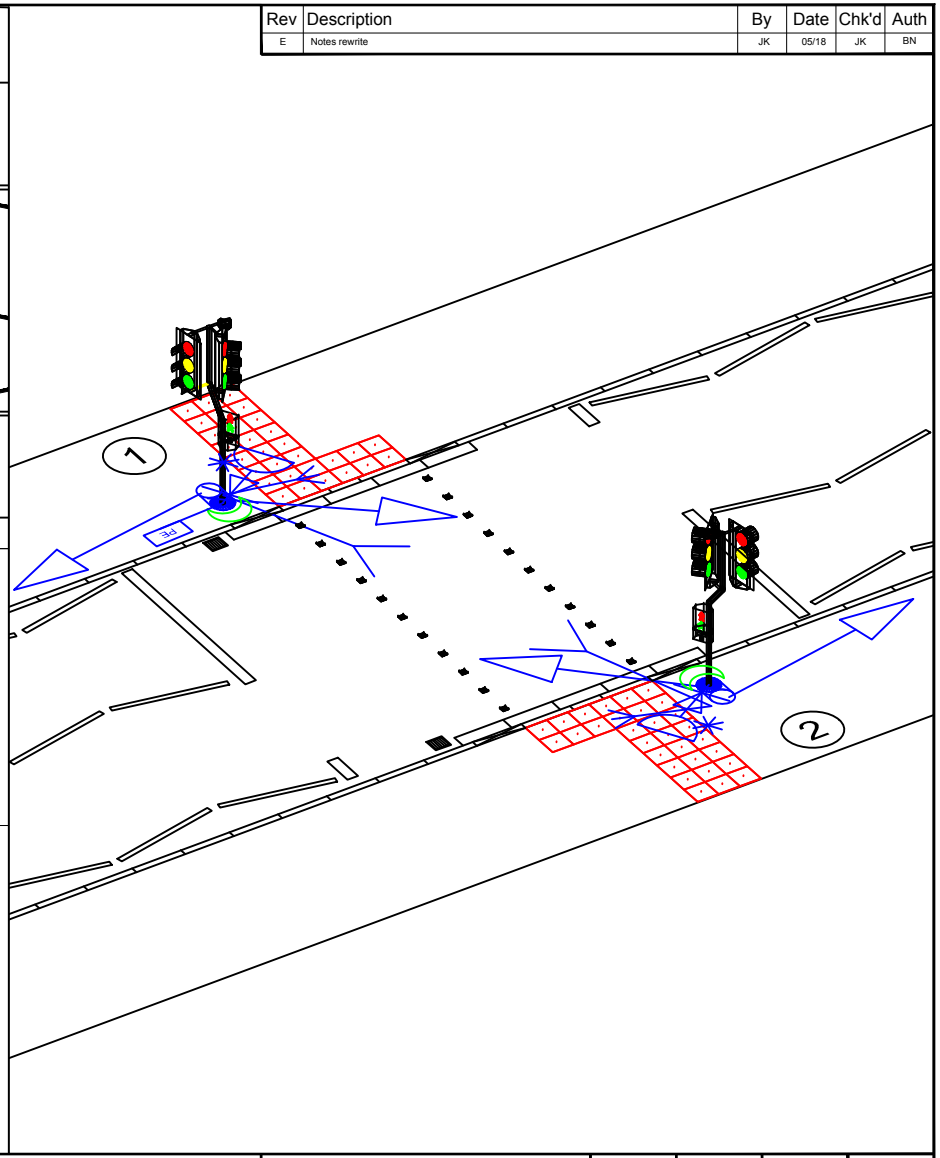

NOTES

1. ON HIGH SPEED ROADS DUPLICATE PRIMARY HEADS ARE REQUIRED, SEE TRAFFIC ADVISORY LEAFLET TAL 2/03
2. ALL WORK TO BE CARRIED OUT IN ACCORDANCE WITH THIS DOCUMENT
3. CROSSINGS WITH HIGH PEDESTRIAN DEMAND MAY NEED TO BE WIDER AND HAVE AN ADDITIONAL HIGH LEVEL REPEATER ANGLED AT 45 DEGREES FROM THE KERB. SEEK ADVICE FROM TCU
4. NUMBER OF ON-CROSSING AND KERBSIDE DETECTORS REQUIRED MAY VARY WITH DETECTION SYSTEM USED AND CROSSING WIDTH.
5. ALL PUSHBUTTONS TO HAVE A FULLY MONITORED ROTATING TACTILE CONE
6. POLE POSITIONS: POLES TO BE LOCATED 0.5M FROM KERB & 0.5M FROM TACTILE PAVING.
7. THE ACCURACY OF THIS DRAWING CANNOT BE GUARANTEED AND SOMERSET COUNTY COUNCIL DOES NOT ACCEPT RESPONSIBILITY FOR ANY INACCURACIES OR OMISSIONS.

KEY

- 4.3m SWAN NECK POLE WITH PRS
- PRIMARY RAG ASPECT
- KERBSIDE DETECTOR
- ON-CROSSING DETECTOR
- NEARSIDE PUFFIN ASPECT WITH COMBINED PBU, AUDIBLE AND TACTILE DEVICE
- PE — PHOTOELECTRIC CELL
- TACTILE PAVING
- STAINLESS STEEL ROAD STUDS

EQUIPMENT ON POLES

Poles 1&2	2 X RAG ASPECT
	1 X KERBSIDE DETECTOR
	1 X ON-CROSSING DETECTOR
	1 X NEARSIDE PUFFIN UNIT WITH PBU
	1 X POLE NUMBERS
Pole 1	1 X PHOTO ELECTRIC CELL

Somerset County Council ©
Traffic & Transport Development Group

County Hall
Taunton
Somerset
TA1 4DY

TEL: (0300) 123 2224
www.somerset.gov.uk

Client: SOMERSET COUNTY COUNCIL

Project: Traffic Control Standard Detail

Title: PUFFIN CROSSING EQUIPMENT ARRANGEMENT

Scale	Design	Check	Auth
N/A	MA	LF	KPJ
	Date 04/05	Date 04//05	Date 09/05

FILE NAME: SCC-TS-SD010-E

Drawing Number: SCC-TS-SD10

Rev: E

Status: -

Rev	Description	By	Date	Chk'd	Auth
D	Notes rewrite	JK	05/18	JK	BN

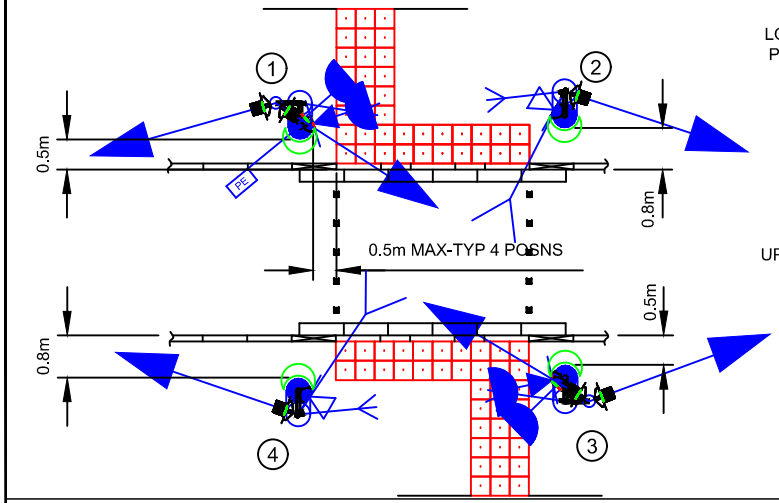

LOWER NEARSIDE UNIT & PBU TO BE ROTATED 30° FROM KERB

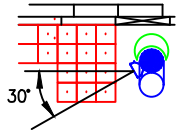

UPPER NEARSIDE UNIT TO BE ROTATED 45° FROM KERB

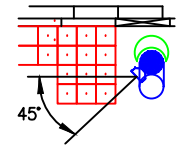

* SEE NOTE 3

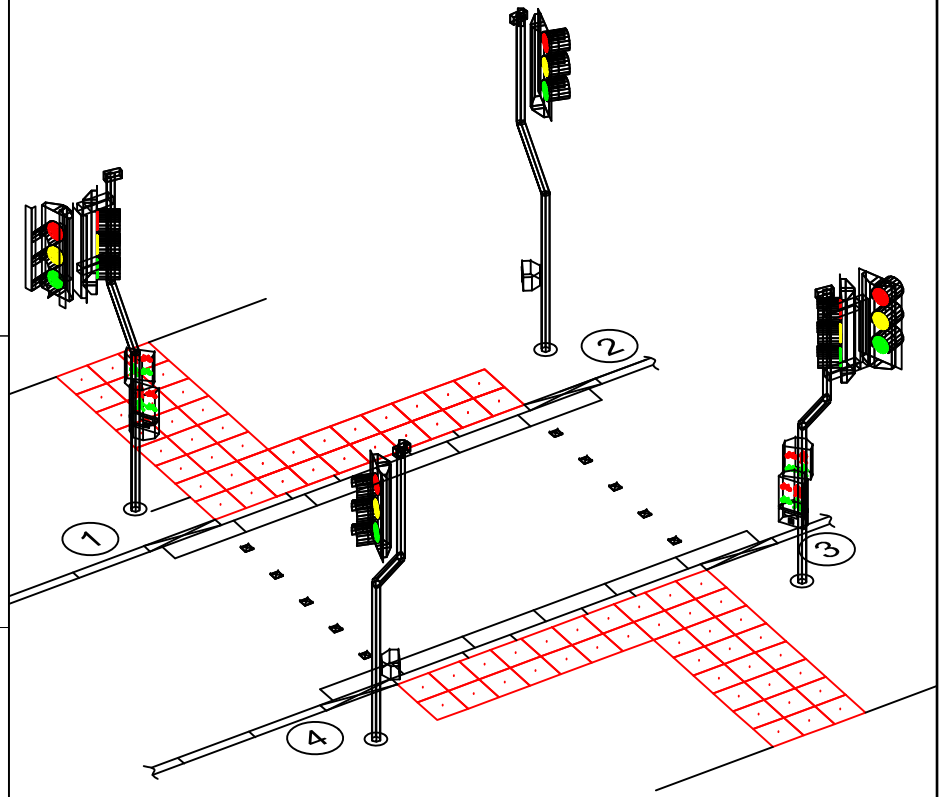

NOTES

1. ON HIGH SPEED ROADS DUPLICATE PRIMARY HEADS ARE REQUIRED, SEE TRAFFIC ADVISORY LEAFLET TAL 2/03
2. ALL WORK TO BE CARRIED OUT IN ACCORDANCE WITH THIS DOCUMENT
3. CROSSINGS WITH HIGH PEDESTRIAN DEMAND MAY NEED TO BE WIDER AND HAVE AN ADDITIONAL HIGH LEVEL REPEATER ANGLED AT 45 DEGREES FROM THE KERB. SEEK ADVICE FROM TCU
4. NUMBER OF ON-CROSSING AND KERBSIDE DETECTORS REQUIRED MAY VARY WITH DETECTION SYSTEM USED AND CROSSING WIDTH.
5. ALL PUSHBUTTONS TO HAVE A FULLY MONITORED ROTATING TACTILE CONE.
6. POLE POSITIONS: POLES 2 & 4 TO BE LOCATED 0.8M FROM KERB, POLES 1 & 3 LOCATED 0.5M FROM KERB. IF FOOTWAY WIDTHS ARE LESS THAN 2M PLEASE CONTACT THE TCU ON 0300 123 2224. ALL POLES ARE LOCATED 0.5M FROM TACTILE PAVING.
7. THE ACCURACY OF THIS DRAWING CANNOT BE GUARANTEED AND SOMERSET COUNTY COUNCIL DOES NOT ACCEPT RESPONSIBILITY FOR ANY INACCURACIES OR OMISSIONS.

KEY

- SWAN NECK POLE WITH PRS
- PRIMARY RAG ASPECT
- EXTENSION BRACKET
- NEARSIDE TOUCAN ASPECT
- NEARSIDE TOUCAN ASPECT WITH SEPERATE PBU WITH AUDIBLE AND TACTILE DEVICES
- PBU WITH TACTILE DEVICE
- KERB-SIDE DETECTOR
- ON-CROSSING DETECTOR
- PE — PHOTOELECTRIC CELL
- TACTILE PAVING, RED, 400mm X 400mm
- STAINLESS STEEL PEDESTRIAN STUDS
- TAPER KERB

EQUIPMENT ON POLES

1,3	2 X RAG ASPECT 2 X NEARSIDE PUFFIN UNIT 1 X PBU POLE NUMBERS
2,4	1 X RAG ASPECT 1 X KERBSIDE DETECTOR 1 X ON-CROSSING DETECTOR 1 X PBU POLE NUMBERS
1	1 X PHOTO ELECTRIC CELL

Somerset County Council ©
Traffic & Transport Development Group

County Hall
Taunton
Somerset
TA1 4DY

TEL: (0300) 123 2224
www.somerset.gov.uk

Client: SOMERSET COUNTY COUNCIL

Project: Traffic Control Standard Detail

Title: TOUCAN CROSSING EQUIPMENT ARRANGEMENT

Scale	Design	Check	Auth
N/A	MA	LF	KPJ
	Date 04/05	Date 04//05	Date 09/05

FILE NAME: SCC-TS-SD011-D

Drawing Number: SCC-TS-SD11

Rev: D

Status: -

Rev	Description	By	Date	Chk'd	Auth
C	Update Spec V4	JK	03/17	RJN	BN

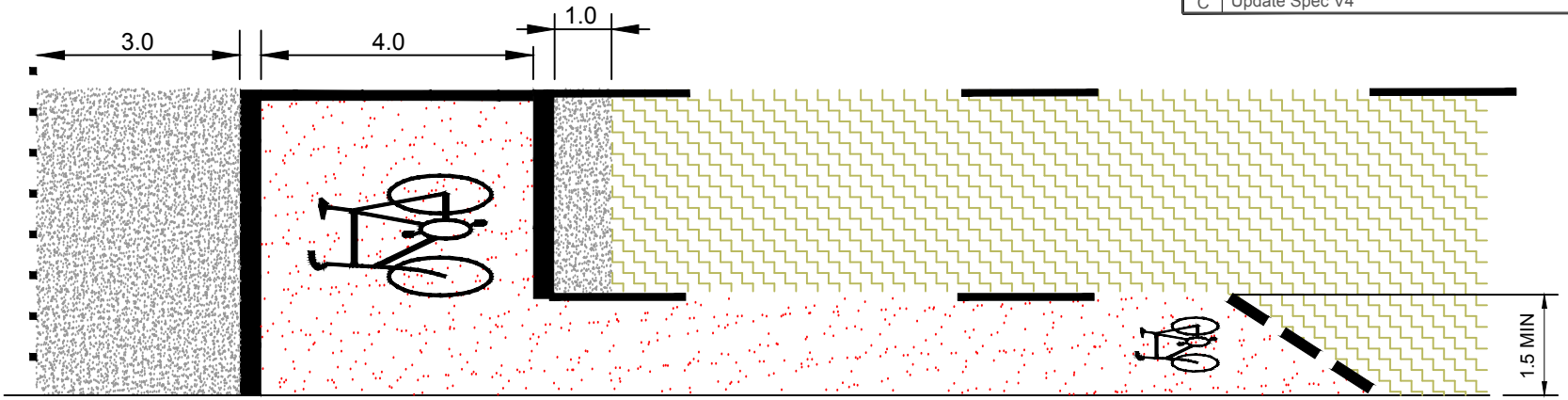

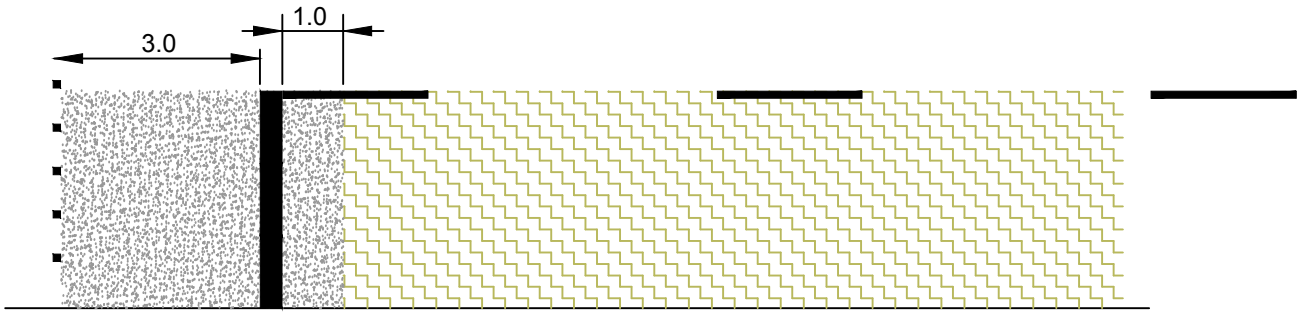

NOTES

1. ALL DIMENSIONS IN METRES.
2. ALL WHITE LINING TO BE LAID IN ACCORDANCE WITH "THE TRAFFIC SIGNS REGULATIONS AND GENERAL DIRECTIONS 2002"
3. ALL TRAFFIC SIGNAL LOOPS & TAILS TO BE MASKED PRIOR TO APPLICATION OF HFS . THE MASKING SHALL BE REMOVED AFTER THE APPLICATION LEAVING THE LOOPS & TAILS VISIBLE.
4. THERE MUST BE A MINIMUM OF 50M HFS ON THE APPROACH TO THE STOPLINE.
5. THE ACCURACY OF THIS DRAWING CANNOT BE GUARANTEED AND SOMERSET COUNTY COUNCIL DOES NOT ACCEPT RESPONSIBILITY FOR ANY INACCURACIES OR OMISSIONS.

KEY

GREY COLOURED HIGH FRICTION SURFACING

BUFF COLOURED HIGH FRICTION SURFACING

RED COLOURED CYCLE LANE SURFACING HIGH FRICTION SURFACING

PEDESTRIAN STUDS

Somerset County Council ©
Traffic & Transport Development Group

County Hall
Taunton
Somerset
TA1 4DY

TEL: (0300) 123 2224
www.somerset.gov.uk

Client	Title	Scale	Design	Check	Auth
SOMERSET COUNTY COUNCIL	HIGH FRICTION SURFACING	N/A	MA 04/05	LF 04//05	KPJ 09/05

Project: Traffic Control Standard Detail

FILE NAME: SCC-TS-SD012-C

Drawing Number: SCC-TS-SD12

Rev: C

Status: -

Rev	Description	By	Date	Chk'd	Auth
E	Update Spec V4	JK	03/17	RJN	BN

NOTES

1. ALL DIMENSIONS ARE IN MILLIMETRES UNLESS OTHERWISE STATED.
2. POLES TO BE MOUNTED IN POLE RETENTION SOCKET SEE STANDARD DETAIL SCC-TS-SD017
3. ALL POLES ARE SLOTLESS.
4. THE ACCURACY OF THIS DRAWING CANNOT BE GUARANTEED AND SOMERSET COUNTY COUNCIL DOES NOT ACCEPT RESPONSIBILITY FOR ANY INACCURACIES OR OMISSIONS.

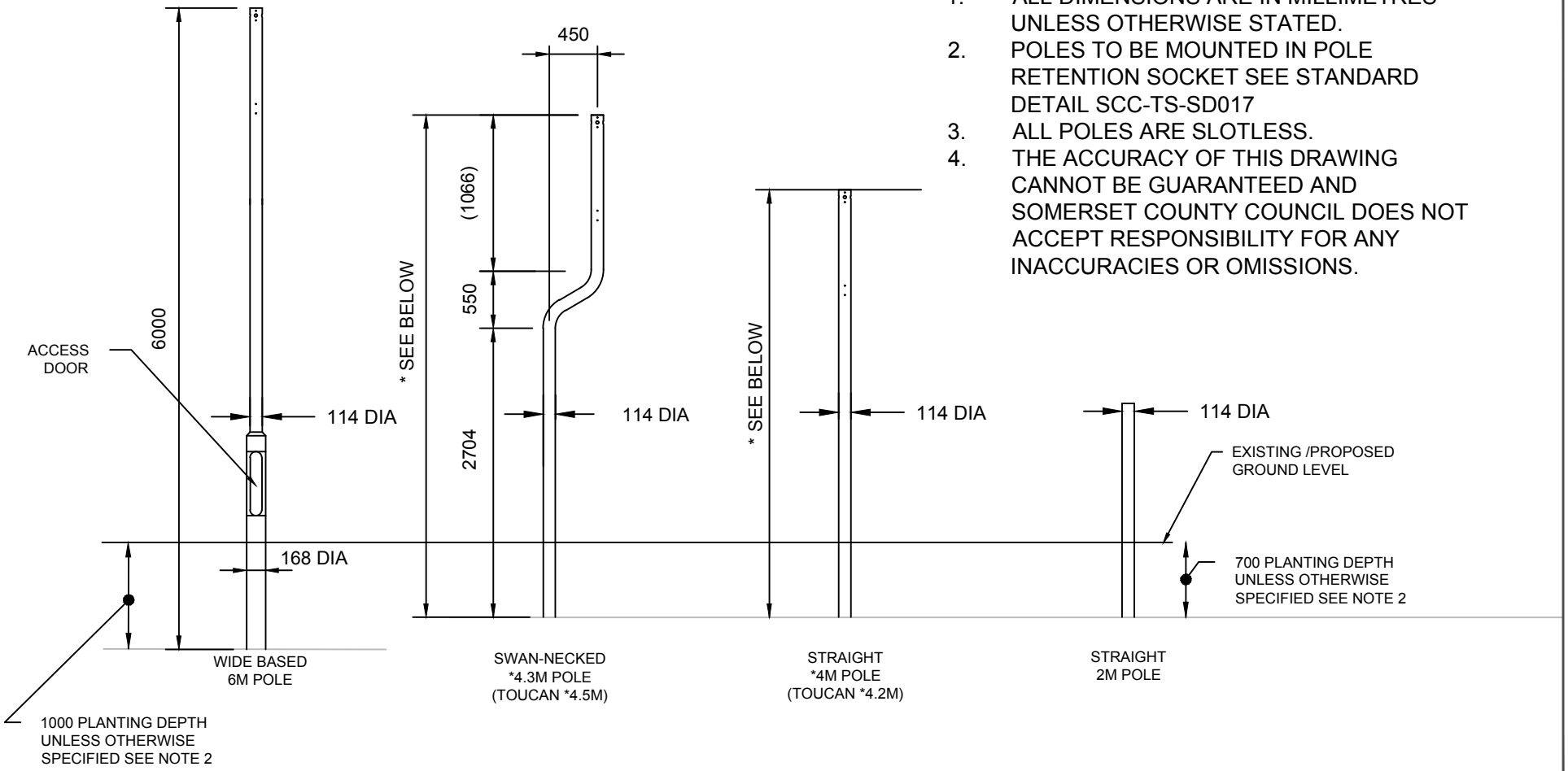

Somerset County Council ©
Traffic & Transport Development Group

County Hall
Taunton
Somerset
TA1 4DY

TEL: (0300) 123 2224
www.somerset.gov.uk

Client	Title	Scale	Design	Check	Auth
SOMERSET COUNTY COUNCIL	SIGNAL POLE DETAIL	N/A	MA 04/05	LF 04//05	KPJ 09/05
Project: Traffic Control Standard Detail		FILE NAME: SCC-TS-SD013-E			
	Drawing Number: SCC-TS-SD13		Rev: E	Status: -	

Rev	Description	By	Date	Chk'd	Auth
E	Update	JK	12/17	LF	BN

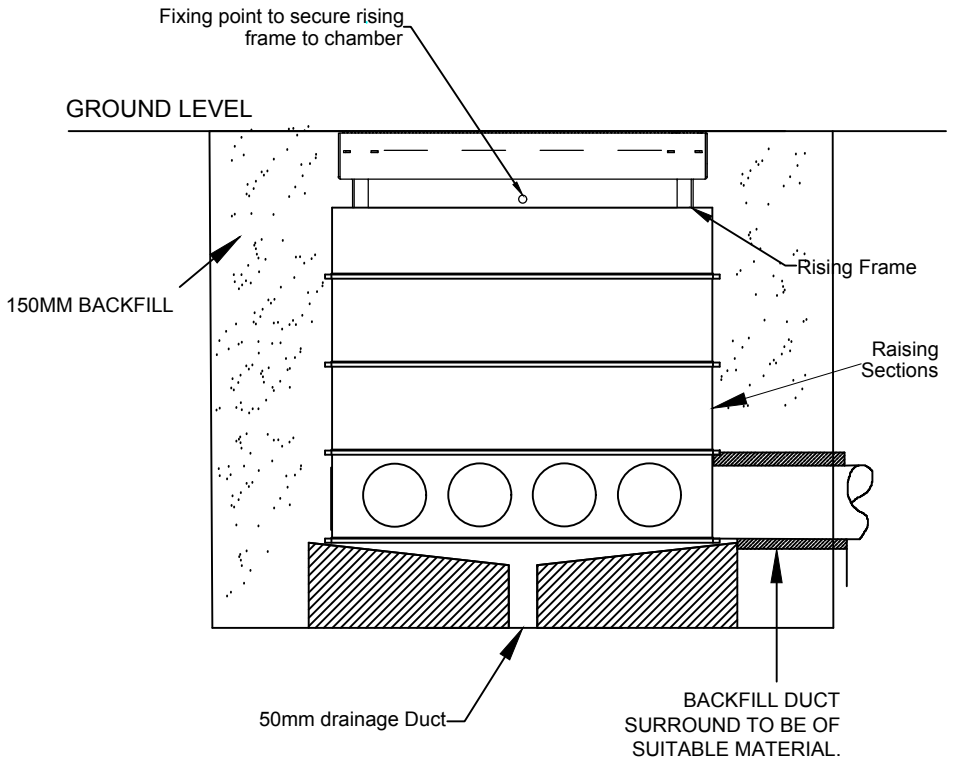

Plan of chamber showing ducts entering chamber

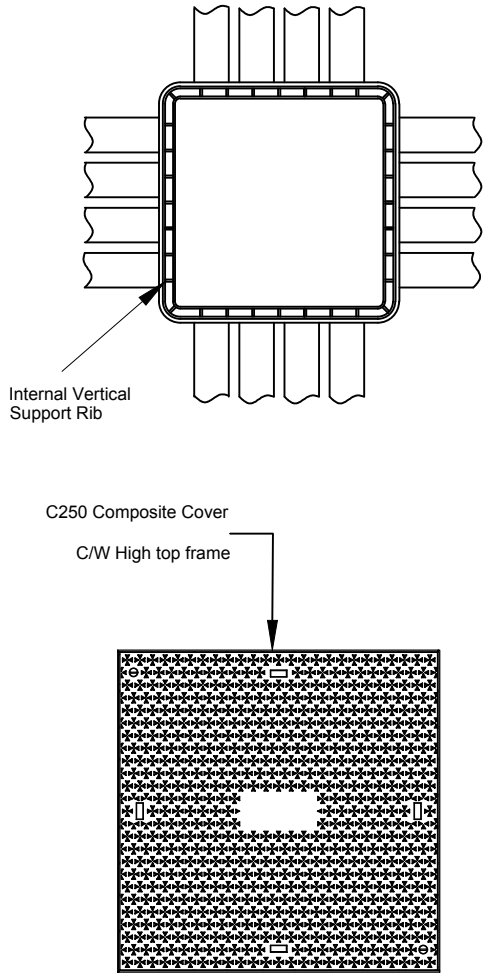

NOTES

1. ALL DIMENSIONS ARE IN MILLIMETRES UNLESS OTHERWISE STATED.
2. FOR TYPES OF CHAMBER UNITS SEE DRAWING NO. SCC-TS-SD001
3. ALL DUCTING TO BE ORANGE IN COLOUR 100mm DIA SMOOTH WALLED INSIDE AND OUT WITH A WALL THICKNESS OF 5mm AND CLEARLY MARKED 'TRAFFIC SIGNALS'. THE DUCT IS TO BE LAID WITH THE WORDING FACE UPWARDS.
4. ALL UNITS MUST HAVE A DRAINAGE HOLE THAT FUNCTIONS
5. CHAMBER SHALL BE BEDDED ON A BASE OF 100mm ST2 CONCRETE AND THE BASE SHALL BE CHAMFERED TO OBTAIN A NATURAL SOAKAWAY OUTLET, 50mm DIAMETER.
6. THE SIDES SHALL BE BACKFILLED WITH GRANULAR FILL MATERIAL OR CONCRETE TO THE SPECIFICATION FOR HIGHWAY WORKS CLAUSE 508.6.
7. A CONCRETE SURROUND SHALL ALWAYS BE USED IN AREAS OF HEAVY VEHICLE LOADING OR WITHIN THE CARRIAGEWAY.
8. NO CUTTING OF MODULAR UNITS IS ALLOWED
9. ALL WORK TO BE CARRIED OUT IN ACCORDANCE WITH THE SCC SPECIFICATION AND GUIDELINES

THE ACCURACY OF THIS DRAWING CANNOT BE GUARANTEED AND SOMERSET COUNTY COUNCIL DOES NOT ACCEPT RESPONSIBILITY FOR ANY INACCURACIES OR OMISSIONS.

Somerset County Council ©
Traffic & Transport Development Group

County Hall
Taunton
Somerset
TA1 4DY

TEL: (0300) 123 2224
www.somerset.gov.uk

Client: SOMERSET COUNTY COUNCIL

Project: Traffic Control Standard Detail

Title: ACCESS CHAMBER CONSTRUCTION GENERAL DETAIL

Scale	Design	Check	Auth
N/A	MA	LF	KPJ
	Date 04/05	Date 04//05	Date 09/05

FILE NAME: SCC-TS-SD014-E

Drawing Number: SCC-TS-SD014

Rev: E

Status: -

NOTES

1. ALL DIMENSIONS IN MILLIMETRES.
2. ALL CABINETS TO BE MADE OF 2mm (MIN) THICKNESS GALVANISED STEEL.
3. ALL PILLARS, DOORS AND INCOMING METAL CABLE TO BE EARTHED
4. REMOTE EQUIPMENT PILLAR (SMALL) TO BE BLACK IN COLOUR AND HINGED DOORS WITH TRI-LOCKS.
5. POWER SUPPLY PILLAR (LARGE) TO BE SMOOTH BLACK, ANTI-GRAFFITI FINISH AND HINGED DOORS WITH TRI-LOCKS.
6. DIMENSIONS SHOWN ARE FOR GUIDANCEONLY AND REPRESENT THE MINIMUM REQUIREMENTS. ACTUAL DIMENSIONS WILL VARY BY MANUFACTURER AND SITE REQUIREMENTS.
7. SEE SCC-TS-SD016 FOR LAYOUT OF PILLARS AROUND CONTROLLER CABINET(S).
8. AN ACCESS CHAMBER WILL BE REQUIRED WHERE PILLAR(S) ARE USED TO CONTAIN EQUIPMENT IN REMOTE LOCATIONS (e.g. BUS EQUIPMENT). SEE DETAIL
9. ALL COMMUNICATIONS DUCTING TO BE GREY IN COLOUR, 100mm DIAMETER, SMOOTH INNER AND OUTER BORE WITH PRE-FORMED BENDS / ELBOWS.
10. ALL POWER DUCTING TO BE BLACK IN COLOUR AND 50mm DIAMETER. FLEXIBLE DUCTING CAN BE USED FOR THIS. THESE DUCTS ARE DEDICATED TO ELECTRICITY AND MUST NOT CONTAIN ANY OTHER TYPES OF CABLE.
11. COVER AND FRAME SHALL CONFORM TO BS EN 124 - CLASS C250 UNLESS OTHERWISE STATED.
12. SEE SCC-TS-SD001 FOR CHAMBER DETAILS. TYPE 1 (300X300mm) CHAMBERS SHALL NOT BE USED FOR ACCESS TO THE PILLARS (TYPE 2 OR BIGGER ONLY)
13. ALL WORK TO BE CARRIED OUT IN ACCORDANCE WITH THE SCC SPECIFICATION AND GUIDELINES
14. IF IN DOUBT SEEK ADVICE FROM SOMERSET COUNTY COUNCIL TRAFFIC CONTROL TEAM.
15. THE ACCURACY OF THIS DRAWING CANNOT BE GUARANTEED AND SOMERSET COUNTY COUNCIL DOES NOT ACCEPT RESPONSIBILITY FOR ANY INACCURACIES OR OMISSIONS.

Rev	Description	By	Date	Chk'd	Auth
F	Update	JK	12/17	RJN	BN

SMALL PILLAR FOR REMOTE EQUIPMENT

SEE NOTES 1, 2, 3, 4, 6, 7, 9 & 13

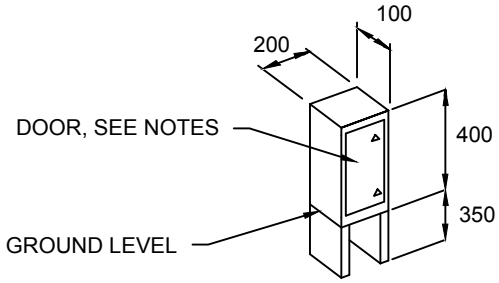

LARGE PILLAR FOR POWER SUPPLY & METER

SEE NOTES 1, 2, 3, 5, 6, 7 &10

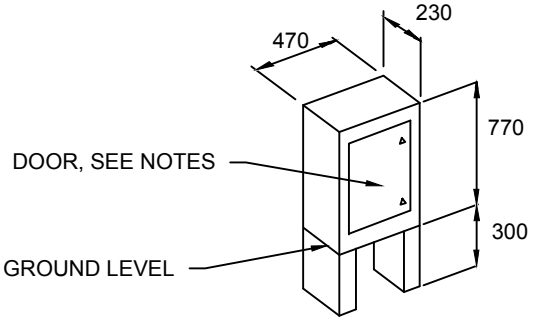

REMOTE / STAND ALONE INSTALLATION

SEE NOTES 1, 2, 3, 4, 6, 7, 8, 9, 11, 12 & 13

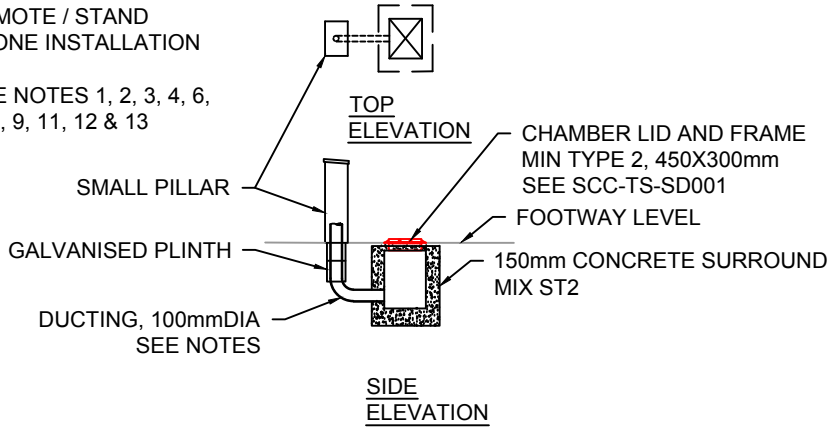

Somerset County Council ©
Traffic & Transport Development Group

County Hall
Taunton
Somerset
TA1 4DY

TEL: (0300) 123 2224
www.somerset.gov.uk

Client	Title	Scale	Design	Check	Auth
SOMERSET COUNTY COUNCIL	TYPICAL EXTERNAL CABINET DETAILS	N/A	MA 04/05	LF 04//05	KPJ 09/05
Project: Traffic Control Standard Detail		FILE NAME: SCC-TS-SD015-F			
	Drawing Number: SCC-TS-SD015		Rev: F	Status: -	

Rev	Description	By	Date	Chk'd	Auth
E	Update Spec V4	JK	03/17	RJN	BN

NOTES

1. ALL DIMENSIONS ARE IN MILLIMETRES UNLESS OTHERWISE STATED.

2. ALL DUCTING BETWEEN CHAMBERS TO BE ORANGE IN COLOUR, 100mm DIAMETER, SMOOTH WALLED, INSIDE AND OUT, WITH A MINIMUM WALL THICKNESS OF 5mm AND BE CLEARLY MARKED 'TRAFFIC SIGNALS'. THE DUCT IS TO BE LAID WITH THE WORDING FACE UPWARDS.

3. DIAMETER OF DUCTING BETWEEN EXTERNAL CABINET AND CONTROLLER IS DEPENDENT ON TYPE OF SUPPLY (POWER OR COMMUNICATION, SEE SCC-TS-SD015).

4. ACCESS CHAMBERS AND NUMBER OF DUCTS WILL VARY DEPENDING UPON SITE CONDITIONS. MINIMUM CHAMBER SIZE AROUND CONTROLLER 450 X 450 (TYPE 3)

5. NEED FOR EXTRA CABINET AND CHAMBER WILL DEPEND UPON SIZE AND COMPLEXITY OF SITE.

6. EXTERNAL CABINETS:- SEE SCC-TS-SD015 SMALL FOR REMOTE EQUIPMENT LARGE FOR ELECTRICITY CONNECTION

7. FOR TYPES OF CHAMBER UNIT SEE DRAWING NO. SCC-TS-SD001.

8. POWER COMPANY TO PROVIDE SUPPLY TO EXTERNAL CABINET. SIGNAL COMPANY TO EXTEND POWER SUPPLY TO SIGNAL CONTROLLER

9. ALL WORKS TO BE CARRIED OUT IN ACCORDANCE WITH THE SCC TRAFFIC SIGNALS SPECIFICATION AND GUIDELINES

10. THE ACCURACY OF THIS DRAWING CANNOT BE GUARANTEED AND SOMERSET COUNTY COUNCIL DOES NOT ACCEPT RESPONSIBILITY FOR ANY INACCURACIES OR OMISSIONS.

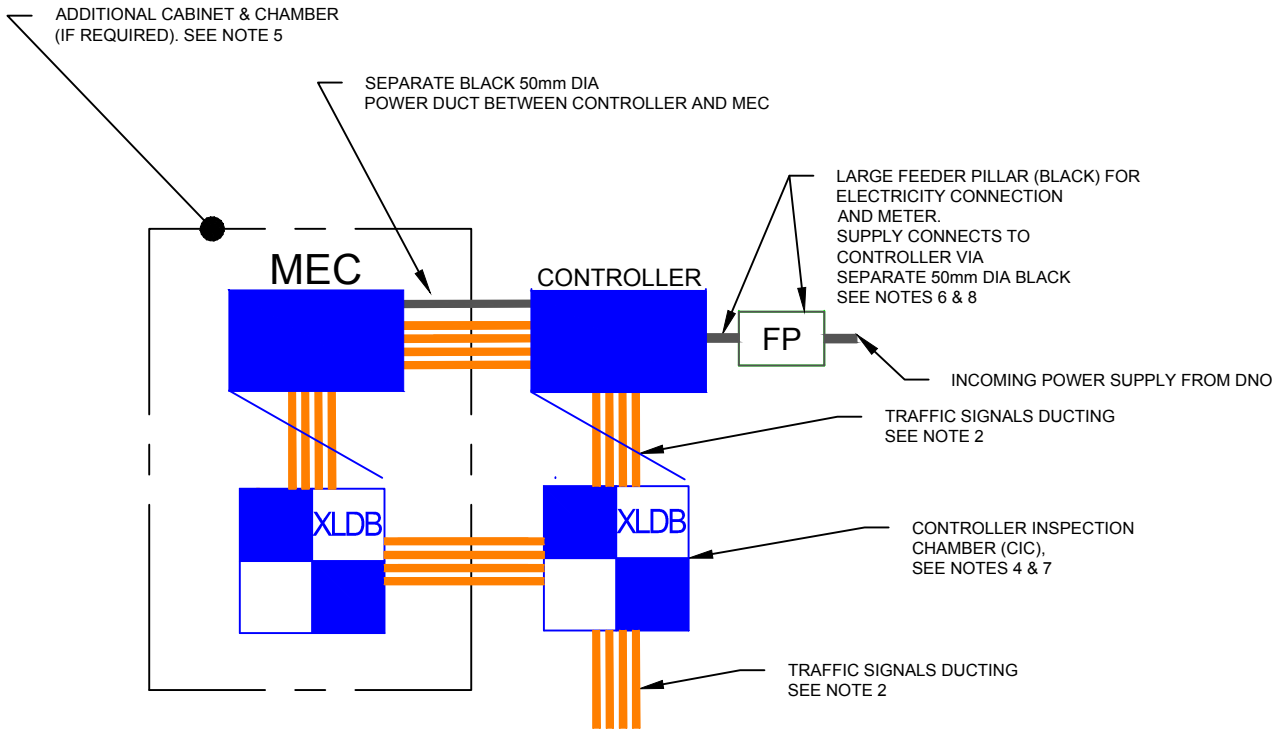

Somerset County Council ©
Traffic & Transport Development Group

County Hall
Taunton
Somerset
TA1 4DY

TEL: (0300) 123 2224
www.somerset.gov.uk

Client: SOMERSET COUNTY COUNCIL

Project: Traffic Control Standard Detail

Title: REQUIREMENTS FOR CHAMBERS CONTROLLERS AND CABINETS

Scale	Design	Check	Auth
N/A	MA	LF	KPJ
	Date 04/05	Date 04//05	Date 09/05

FILE NAME: SCC-TS-SD016-E

Drawing Number: SCC-TS-SD016

Rev: E

Status: -

Rev	Description	By	Date	Chk'd	Auth
E	Update	JK	12/17	RJN	BN

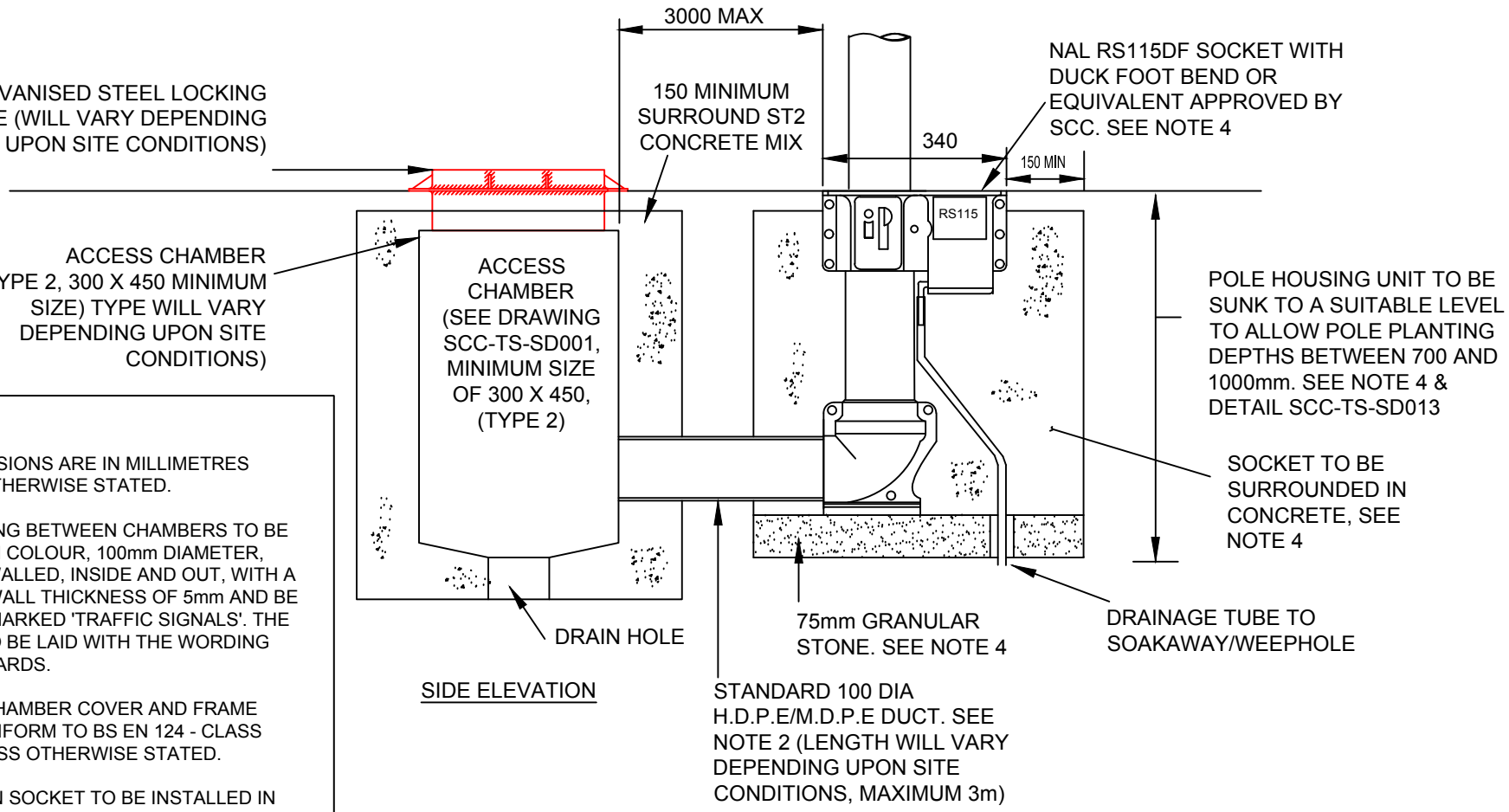

NOTES

1. ALL DIMENSIONS ARE IN MILLIMETRES UNLESS OTHERWISE STATED.
2. ALL DUCTING BETWEEN CHAMBERS TO BE ORANGE IN COLOUR, 100mm DIAMETER, SMOOTH WALLED, INSIDE AND OUT, WITH A MINIMUM WALL THICKNESS OF 5mm AND BE CLEARLY MARKED 'TRAFFIC SIGNALS'. THE DUCT IS TO BE LAID WITH THE WORDING FACE UPWARDS.
3. ACCESS CHAMBER COVER AND FRAME SHALL CONFORM TO BS EN 124 - CLASS C250 UNLESS OTHERWISE STATED.
4. RETENTION SOCKET TO BE INSTALLED IN ACCORDANCE WITH MANUFACTURERS ASSEMBLY INSTRUCTIONS. ONLY APPROVED RETENTION SOCKETS SHALL BE USED
5. ALL WORK TO BE CARRIED OUT IN ACCORDANCE WITH THIS DOCUMENT.
6. THE ACCURACY OF THIS DRAWING CANNOT BE GUARANTEED AND SOMERSET COUNTY COUNCIL DOES NOT ACCEPT RESPONSIBILITY FOR ANY INACCURACIES OR OMISSIONS.

Somerset County Council ©
Traffic & Transport Development Group

County Hall
Taunton
Somerset
TA1 4DY

TEL: (0300) 123 2224
www.somerset.gov.uk

Client: SOMERSET COUNTY COUNCIL

Project: Traffic Control Standard Detail

Title: POLE RETENTION SOCKETS

Scale	Design	Check	Auth
N/A	MA	LF	KPJ
	Date 04/05	Date 04//05	Date 09/05

FILE NAME: SCC-TS-SD017-E

Drawing Number: SCC-TS-SD017

Rev: E

Status: -

Rev	Description	By	Date	Chk'd	Auth
D	Update Spec V4	JK	03/17	RJN	BN

NOTES

1. DIMENSIONS IN MILLIMETRES UNLESS OTHERWISE STATED.
2. WHERE POSSIBLE CHAMBER TO BE MOUNTED OUT OF VEHICLE WHEEL TRACKING AREA.
   MINIMUM DISTANCE FROM KERB EDGE 225mm
3. 50mm DIA FLEXI DUCT CAN BE USED TO CONNECT TO FOOTWAY CHAMBER.
4. MAXIMUM OF TWO LOOPS PER CARRIAGEWAY LOOP BOX
5. ONLY APPROVED CARRIAGEWAY LOOP BOXES SHALL BE USED
6. CARRIAGEWAY LOOP BOX MUST BE CONSTRUCTED IN DUCTILE IRON TO BS2789.
7. LOOP CHAMBERS MUST BE SUPPLIED WITH A MINIMUM OF 4 ENTRY POINTS FOR LOOP CABLES.
8. ALL ENTRY POINTS MUST BE SEALED IF NOT IN USE.
9. LOOP CHAMBERS MUST BE OCTAGONAL IN SHAPE TO ENABLE CORE DRILLING INSTALLATION.
10. ALL WORK TO BE CARRIED OUT IN ACCORDANCE WITH THE SCC TRAFFIC SIGNALS SPECIFICATION AND GUIDELINES

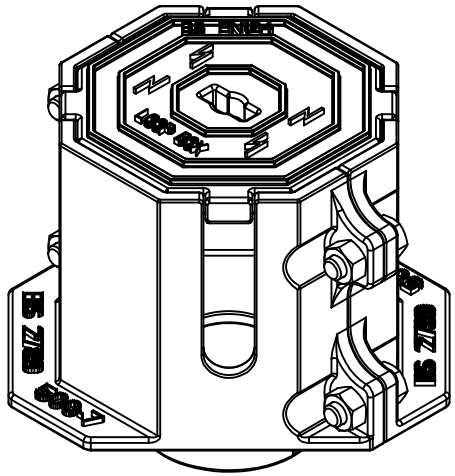

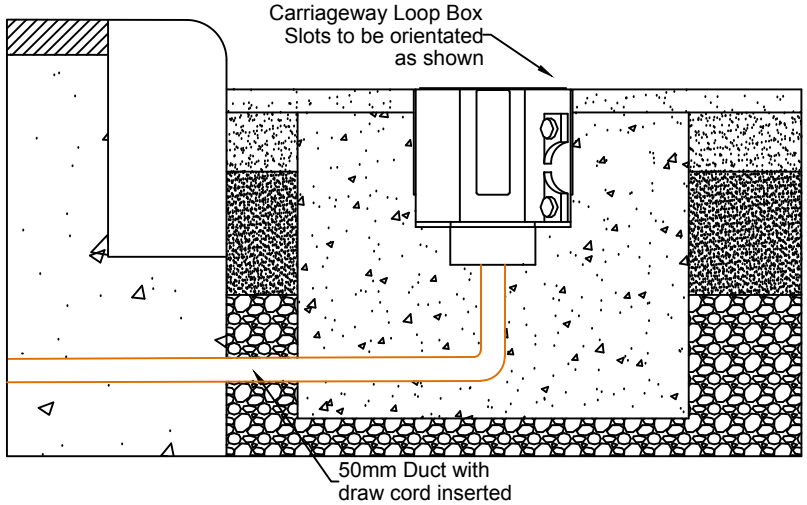

Installation of Carriageway Loop Box Offset from Kerb

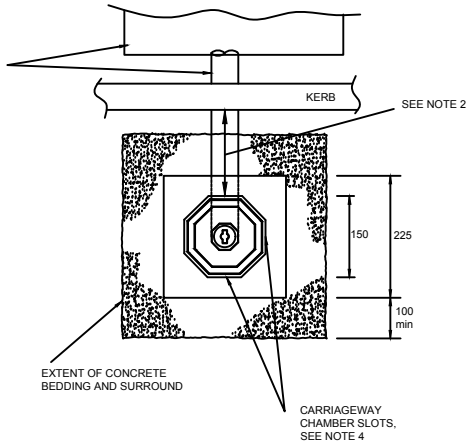

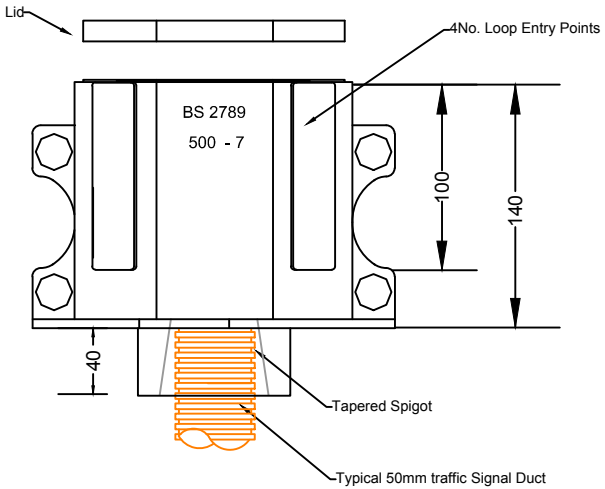

Somerset County Council ©
Traffic & Transport Development Group

County Hall
Taunton
Somerset
TA1 4DY

TEL: (0300) 123 2224
www.somerset.gov.uk

Client	Title	Scale	Design	Check	Auth
SOMERSET COUNTY COUNCIL	CLB, CARRIAGEWAY LOOP BOX	N/A	MA	LF	KPJ
			Date 04/05	Date 04//05	Date 09/05
Project: Traffic Control Standard Detail		FILE NAME: SCC-TS-SD018-D			
	Drawing Number: SCC-TS-SD018		Rev: D	Status: -	

Rev	Description	By	Date	Chk'd	Auth
C	Update Spec V4	JK	03/17	RJN	BN

TYPE BN

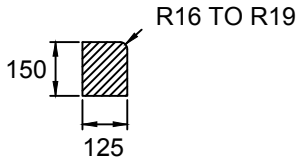

TYPE CS1

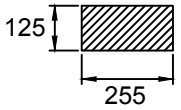

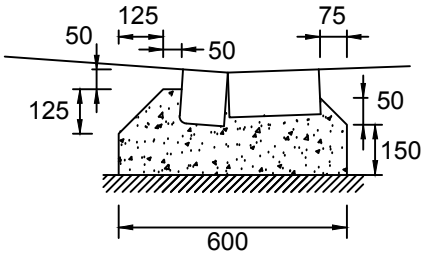

TYPE HB2

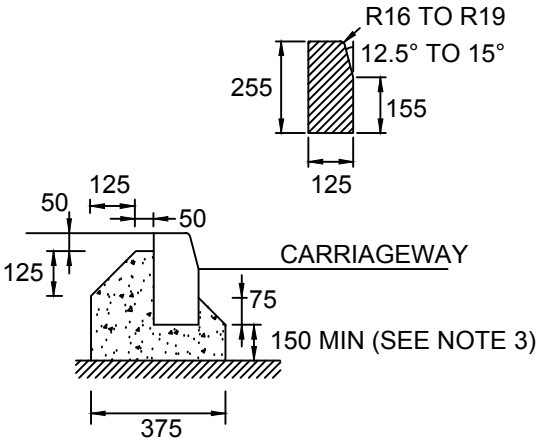

TYPE DL1

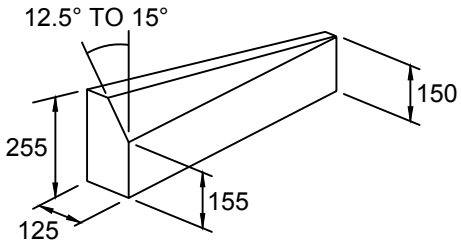

TYPE DR1

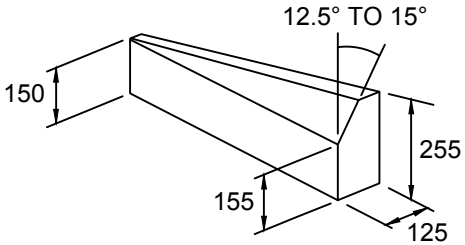

TYPE QHB

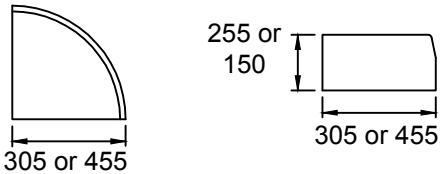

PLAN ELEVATION

NOTES

1. ALL DIMENSIONS ARE IN MILLIMETRES UNLESS OTHERWISE STATED.
2. ALL KERBS TO BS EN 1340
3. THE DEPTH OF THE CONCRETE FOUNDATION SHALL NOT BE LESS THAN THE MINIMUM SHOWN AND SHALL BE SUFFICIENT TO ALLOW THE FOUNDATION TO BE PLACED ON OR BELOW THE TOP OF THE SUB-BASE COURSE.
4. FOR ADDITIONAL INSTALLATION DETAILS FOR TYPES BN AND CS1 SEE DRAWING: SCC-TS-SD008.
5. ALL WORK TO BE CARRIED OUT IN ACCORDANCE WITH THE SCC TRAFFIC SIGNAL SPECIFICATION AND GUIDELINES

KEY

SUB-BASE

ST1 CONCRETE

THE ACCURACY OF THIS DRAWING CANNOT BE GUARANTEED AND SOMERSET COUNTY COUNCIL DOES NOT ACCEPT RESPONSIBILITY FOR ANY INACCURACIES OR OMISSIONS.

Somerset County Council ©
Traffic & Transport Development Group

County Hall
Taunton
Somerset
TA1 4DY

TEL: (0300) 123 2224
www.somerset.gov.uk

Client: SOMERSET COUNTY COUNCIL

Project: Traffic Control Standard Detail

Title: STANDARD KERB DETAILS (AS BS EN 1340)

Scale	Design	Check	Auth
N/A	MA	LF	KPJ
	Date 04/05	Date 04//05	Date 09/05

FILE NAME: SCC-TS-SD020-C

Drawing Number: SCC-TS-SD020

Rev: C

Status: -